Service Manual
Buses

Section **3 (37)**

Electrical system
B10B and B12

Component Wiring Diagrams

TP 15634/1

VOLVO

Contents

Order number: TP 15634/1

Electrical system, B10B and B12

Introduction

This Manual describes the chassis-mounted electrical system for B10B and B12 buses.

The division of the electrical circuits into separate functional areas follows the same principles as in other Volvo Bus Electrical System Manuals.

How to read our electrical schematic diagrams

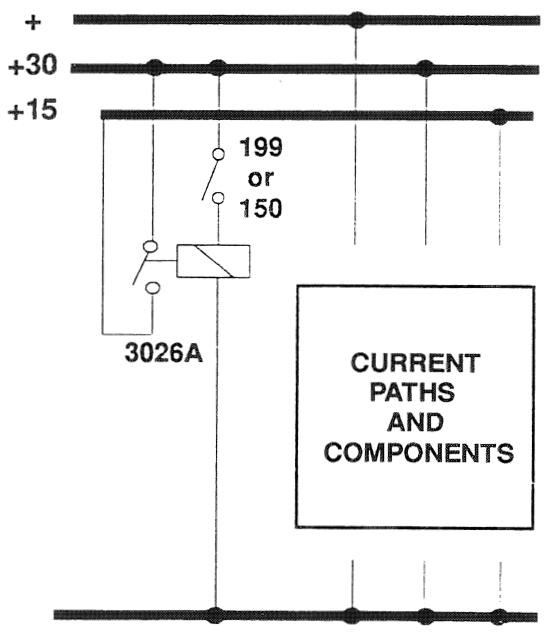

The "+" line on the schematic diagrams represents a direct connection to the battery, protected by an 80A fuse. This line is used for electrical items which must be permanently supplied with voltage, such as clocks, hazard warning lights, communications radio etc.

The "+" line supplies the "+" connection on the electrical centre printed circuit board.

The "+30" line is supplied with voltage whilst the battery master switch is closed, to connect it to the "+" line. This switch may be either manually or electrically operated, depending on the bus version.

The "+30" line supplies the "+30" connection on the electrical centre printed circuit board.

The "+15" line is relay-controlled and only supplied with voltage when the RUN switch (199) or key switch (150) are in the RUN position, connecting the "+30" line to the "+15" line.

The "+15" line supplies the "+15" connection on the electrical centre printed circuit board.

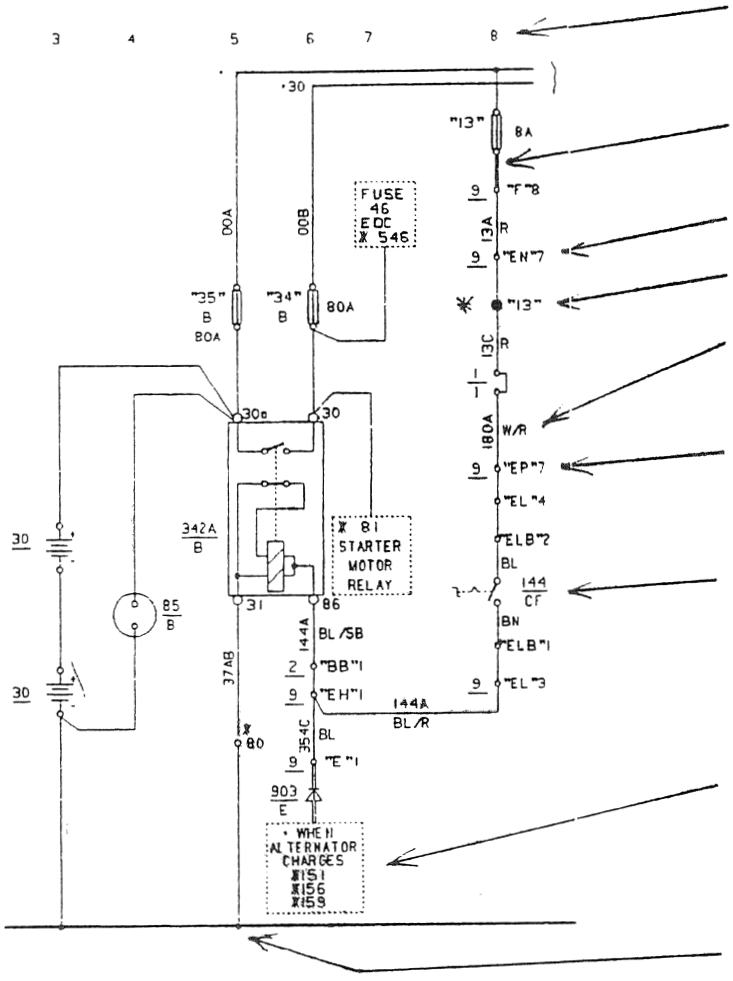

Current path reference number.

A double line indicates a connection to a printed circuit board.

Detachable connection.

Permanent connection.

Wire number and colour (refer to "Colour coding" on pages 10 and 11 for the colour coding descriptions).

9-pole connector marked "EP", pin 7

A component, in this case number 144, the battery master switch. Every component has as unique component number, which is clearly shown in the diagram by underlining. CF stands for the component location on the chassis front (refer to the "Component location codes" table below).

The continuous sequence of current path reference numbers at the top of the schematic diagrams make it easier to cross-refer from one connected current path to another, and each cross-reference is shown on the diagram by a **X** symbol.

Ground connection, direct to the chassis, which acts as the main ground return line.

*) **Note:**
Ultrasonic welded connections are indicated by black dots. In this example "13" indicates that the line is supplied from fuse "13" and it may be necessary to check other circuits connected to this fuse during fault diagnosis.

Turn to the fuse diagram and list on pages 16/17 to see which circuits are energised by the fuses (in this case fuse 13 is connected to circuits in current paths 8, 14, 139, 284 and 292).

Component Location Codes

Code	Location
B	Battery box
CC	Chassis centre
CF	Chassis front
CR	Chassis rear
CT	Chassis at intake manifold
CV	Chassis at battery box
E	Electrical centre front
ER	Electrical centre rear
I	Instrument panel
M	Engine/transmission area
P	Pedal plate area

Component symbols

These are the electrical symbols used in this Service Manual.

Fuse

Relay

Relay with holding coil

Timer

Solenoid-operated valve

Actuator coil

Lamp

Indicator lamp, blinking

Indicator lamp, steady light

Buzzer

Alternator

Transistor or electronic device

Heating element

Electronic switch

Instrument gauge

Instrument gauge with built-in electronic switch

Socket for external connection

Body connector

Potentiometer or rheostat

Clock

Electric motor

Battery

Diode

Closing contact

Breaking contact

Momentary contact

Shift

Jumper

Pressure switch

Thermal switch

Multi-position switch

Spring-loaded normally-open contact

Push-button

ON-OFF, manually turned contact

ON-OFF, manually pushed contact

ON-OFF, manual push-pull contact

Manual ON, automatic park contact

Automatic ON-OFF contact

Cam-operated contact

Detachable connection

Permanent connection

Ultrasonic welded connection

Sealed connection (legal requirement)

Pressure sender

Temperature sender

Liquid level sender

Tacho sender

Inductive sender

Electronic pulse generator

Electronic pulse transformer

Electronic amplifier

Electrical centre test connector pin

Reference trimming control, EDC

Control rod travel trimming control, EDC

Electrical centres

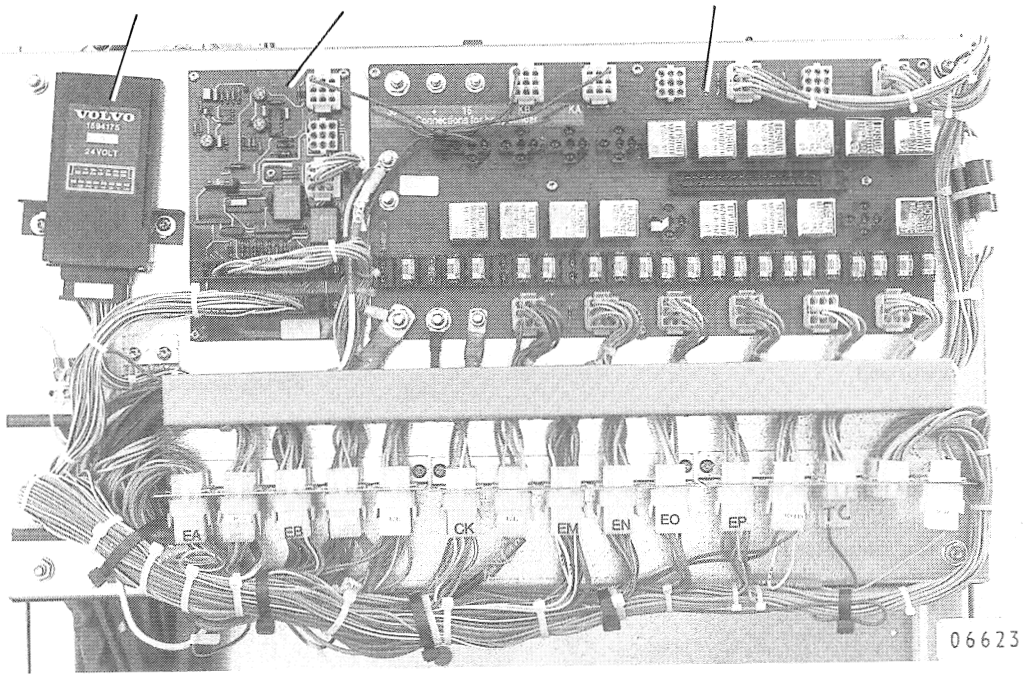

EA	GA	EB	ED	EE
EF	AT	EH	EJ	EK

CK	EL	EM	EN	EO
RET	STE	ER	EI	ET

EP	GBX	KE	KF	KH
EG		TC	KG	

Main electrical centre

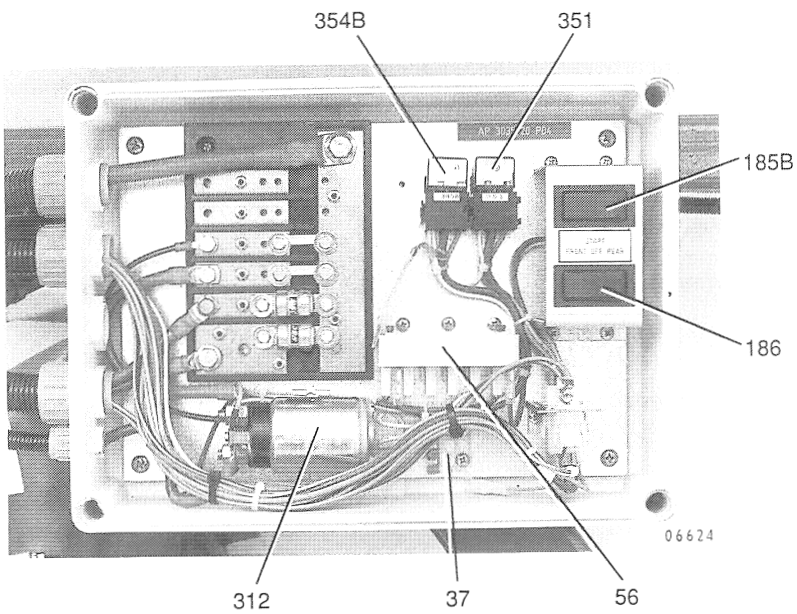

Rear electrical centre

Refer to the respective circuit schematic diagrams and their component location illustrations for details of the electronic control units for the automatic transmission, electronic diesel control (EDC), Volvo G7 EGS transmission, electrical retarder, electrical accelerator and ABS systems.

Relays and connectors in the main electrical centre

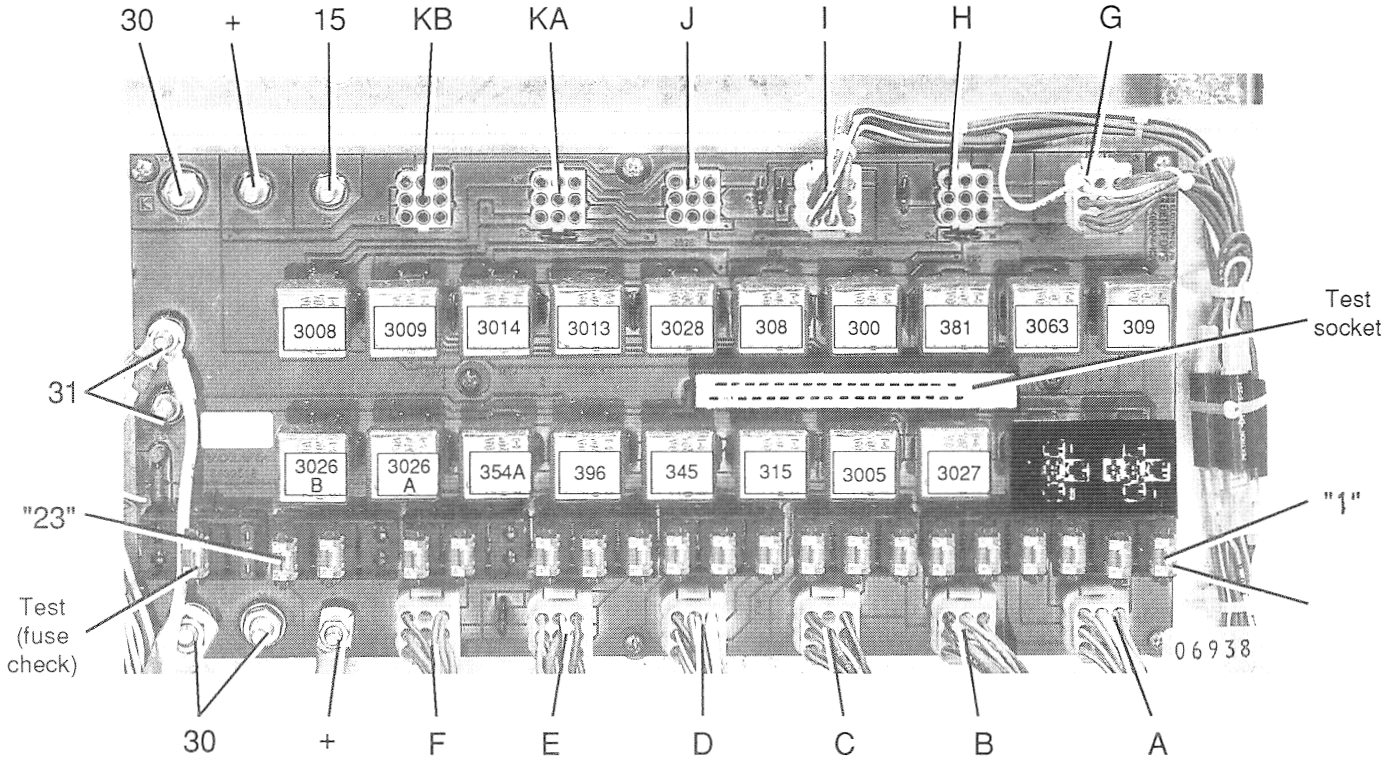

Relay	Circuit and function
300	Headlamps high/low beam
308	Brake lights
309	Parking lights
315	Starting switch
318	Exhaust gas pressure regulator
345	Start inhibit
354A	Starting position
381	Retarder indicator lamp
389	Starting heater indicator lamp
396	Transmission start position (neutral)
3005	Parking brake off and warning buzzer
3008	Kneeling inhibit (optional)
3009	Kneeling down
3013	Kneeling up
3014	Kneeling down holding
3026A	+15 supply to chassis circuits (Feed/Keystart switch)
3026B	+15 supply to body circuits (Aux. Feed/Keystart switch relay)
3027	Fire warning lamp and buzzer
3028	Reversing lights
3041	Transmission retarder indicator lamp (in socket marked 381)
3063	Exhaust brake/Engine stop

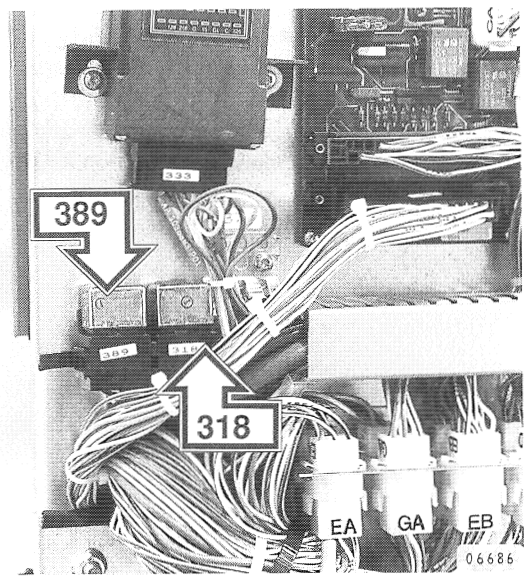

Notes:
Other relays are identified in their respective schematic diagrams and descriptions.

The FUSE CHECK socket labelled "TEST" is an empty fuse socket connected to a green light-emitting diode. This socket may be used to check any of the circuit breakers, and the green LED will light if the breaker is serviceable. Any circuit breaker or bladetype fuse may be exchanged for any other with the same rating.

Test socket

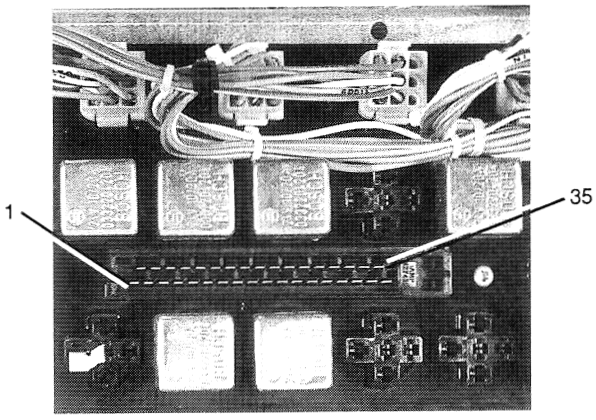

The test socket allows the voltages at certain important points within the electrical systems to be monitored. This is a fault tracing aid. The test socket is a 35-pole AMP minitimer connector, type 527439.

Pin	Test conditions
1	Kneeling circuit, high level position
2	Ground
4	Kneeling circuit, high level position
5	(+) during starting if charging condition not fulfilled
6	(+) during starting if neutral gear condition fulfilled
7	(+) during starting if start inhibit condition not fulfilled
8	(+) during starting if all start conditions are fulfilled and start sequence is activated
9	Buzzer signal can be activated when parking brake set on
10	Connected to +15 supply fuse "8"
11	If this pin is grounded, the fire warning lamps should light
12	(+) if splitter gear activated (low split) or alternatively, (–) for ZF automatic transmission kick-down
13	(+) during starting
14	(+) if parking lights switched on
19	Level control circuit, (+) when raising from low level
20	Reversing lights
21	(+) when kneeling
22	Kneeling circuit, (+) until raising starts
23	Kneeling circuit, (+) until level holding valve blocked
25	(+) when brake lights activated
26	(+) when dipped headlights selected
28	(+) during battery charging
29	(–) when parking brake set on, and also in certain body electrical functions
33	Permanent (–)
35	(+) during exhaust braking

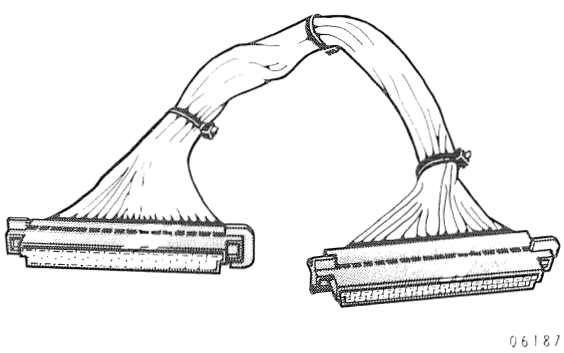

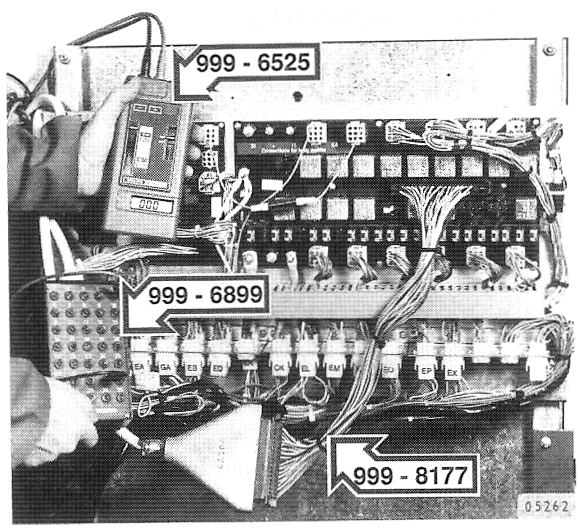

Adapter for connection to electrical centre test socket

Main printed circuit board interconnections schematic diagram

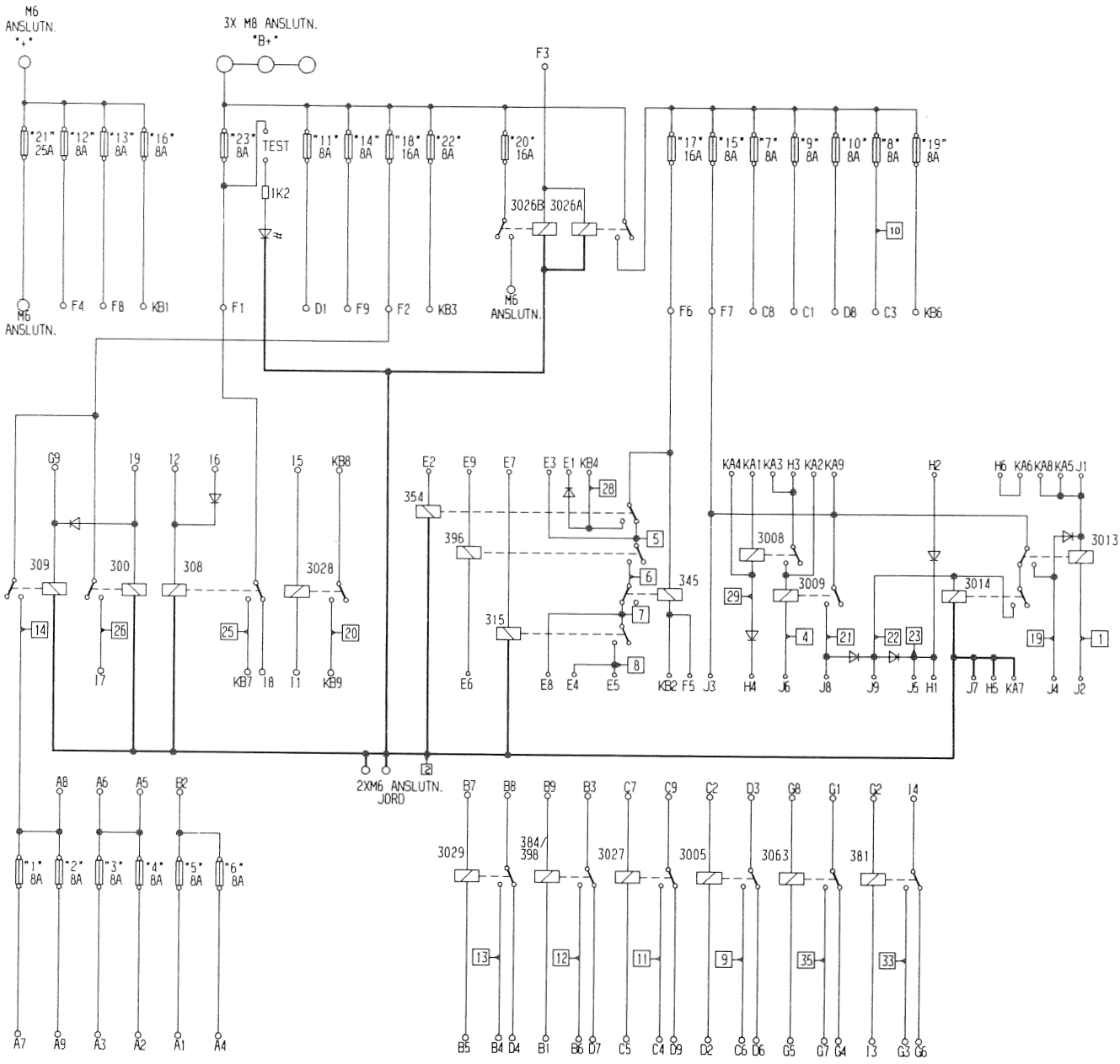

The numbers in squares refer to pins in the test socket (see "Test socket" list on page 6).

Body connections

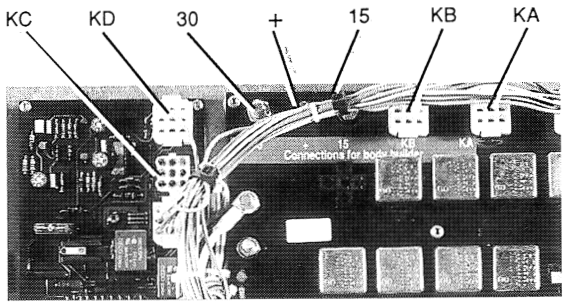

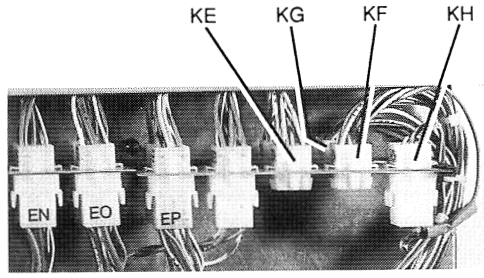

06116

Reference	Function
+	Direct battery + connection
+ 30	Battery + connection via battery master switch (144)
+15	+ connection via feed switch relay (3026A)
KA1	Kneeling inhibit control signal input
KA2	Lowering control signal, kneeling cct.
KA3	Lowering control signal, kneeling cct.
KA4	Parking brake pressure signal
KA5	Raising control signal, kneeling cct.
KA6	Raising control signal, kneeling cct.
KA7	Ground for kneeling circuit
KA8	Same as KA5
KA9	Fuse "15" (+) for body components
KB1	Fuse "16" (+)
KB2	Start inhibit signal
KB3	Fuse "22" (30)
KB4	(+) when alternator is charging
KB5	Not connected
KB6	Fuse "19" (+15)
KB7	Brake lights connection
KB8	Reversing lights (Relay 3028 "30")
KB9	Reversing lights (Relay 3028 "87")
KC1	Warning lamp, door brake
KC2	Warning lamp, rear fog lights
KC3	Warning lamp, next stop sign
KC4	Warning lamp, direction indicators
KC5	Warning lamp, engine compartment/luggage door open, no buzzer
KC6	Warning lamp, engine compartment/luggage door open, with buzzer
KC7	Warning lamp, doors open
KC8	Warning lamp, parking brake off
KC9	Warning lamp, perambulator
KD1*	
KD2*	
KD3	Buzzer activating input
KD4	Buzzer (100 mA)
KD5*	
KD6	Lamp test "+" (1A)
KD7*	
KD8	Not connected
KD9	Not connected

Reference	Function
KE1	Parking lights (fuse "1")
KE2	Parking lights (fuse "2")
KE3	Headlights, high beam (fuse "3")
KE4	Headlights, high beam (fuse "4")
KE5	Headlights, low beam (fuse "5")
KE6	Headlights, low beam (fuse "6")
KE7	Headlights "+", to control wash/wipe
KE8	Not connected
KE9	Not connected
KF1	Windscreen wipers, to delay interruptor
KF2	Windscreen wipers, return from interruptor
KF3	Direction indicators, "49" supply from blinker circuit
KF4	Direction indicators, "49"
KF5	Direction indicators, "15"
KF6	Direction indicators, "L"
KF7	Direction indicators, "30"
KF8	Direction indicators, "49 a/c"
KF9	Direction indicators, "R"
KG1	Buzzer, reversing lights
KG2	Buzzer, hazard warning lights
KG3	Not connected
KG4	Buzzer (+)
KG5	Buzzer, doors
KG6	Windscreen wipers, "53a"
KG7	Windscreen wipers, "53b"
KG8	Windscreen wipers, "53"
KG9	Windscreen wipers, main switch
KH1	To destination sign relay on body
KH2	Not connected
KH3	"+" with emergency switch (180) open
KH4	Not connected
KH5	Direction indicators, main switch
KH6	Horn (grounded via steering column)
KH7	Not connected
KH8	Not connected
KH9	Not connected

* These connections must not be used to supply current without permission from Volvo Bus Corporation.

Warning and indicator lamps printed circuit board

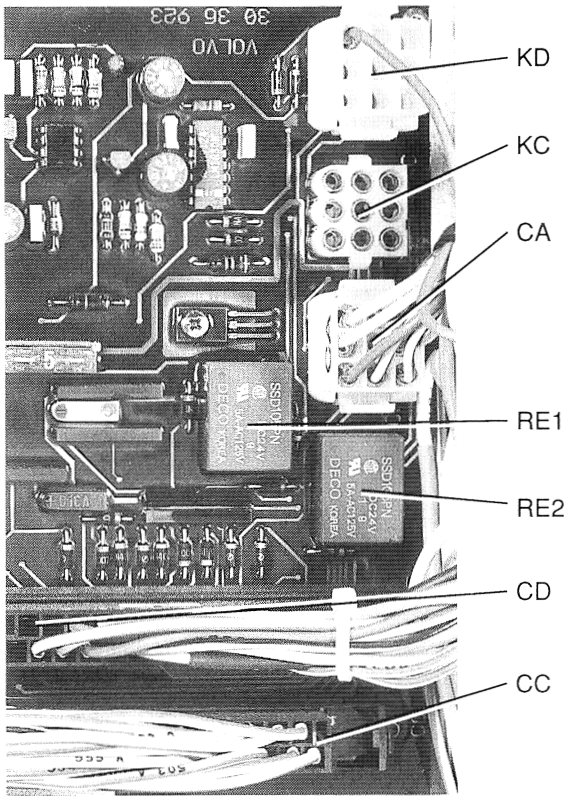

06117

The warning and indicator lamps printed circuit board has three functions:

- to receive control lamp activation signals and determine, according the signal priorities, whether to activate the central warning lamp and/or warning buzzer
- it carries the electronic circuits for monitoring coolant level
- to carry out the lamp test function in its electronic circuits

This board carries two solid-state relay circuits; RE1 to control the lamp test switching, and RE2 to control the engine oil pressure low warning buzzer.

CA pin	Connection
1	"+" supply from fuse "9"
2	Lamp check ground
3	Electronic ground
4	EGS buzzer on
5	EGS central warning lamps on
6	Lamp check "+" input
7	Buzzer switching connection
8	Coolant level sensor
9	Central warning lamps switching connection

CC pin	Output signal to indicator/warning lamps
1	Perambulator
2	Retarder
4	ABS braking system
5	Fire warning
6	Service brakes
7	Coolant temperature
8	Coolant level
9	Door brakes
10	Charging (alternator 1)
11	Oil pressure
12	Transm. temp./ EGS diagnostics
13	Rear fog lights
14	Next stop sign
15	Direction indicators
16	Starting heater
17	Low suspension bellows pressure
18	Door open
19	Luggage door open
20	High beam
21	Charging (alternator 2)
22	Parking brake
23	Engine compt. temp.
25	Engine oil level

CD pin	Sensor input signal
1	Perambulator
2	Retarder
4	ABS braking system
5	Fire warning
6	Service brakes
7	Coolant temperature
8	Coolant level
9	Door brakes
10	Charging (alternator 1)
11	Oil pressure
12	Transm. temp./ EGS diagnostics
13	EGS diagnostics
14	Next stop sign
15	Direction indicators
16	Starting heater
17	Low suspension bellows pressure
18	Door open
19	Luggage door open
20	High beam
21	Charging (alternator 2)
22	Parking brake
23	Engine compt. temp.
25	Engine oil level

Wire numbering

The chassis wiring is easy to trace due to its colour coding and wire numbering.

A wire is given the same number as the component it is connected to, with the exception of grounding wires and indirect ground wires (between components).

Ground wires are labelled 37, 37A, 37B etc. Indirect ground wires are labelled with the numbers of the components they are connected to, e.g. 216A.

If several wires lead to the same component, each wire carries the same number, but with the suffix A, B, C, D etc. If a wire is further split, it is marked with "double letters", e.g. 2AA, 2AB etc.

Colour coding

The electrical wiring is normally colour-coded according to the components or areas to which it is connected, as shown in the following table. There may however be exceptions to these "rules" where the use of the same colour could cause confusion. The schematic diagrams are labelled with the actual colours used.

Wire colours		Colour code	Type of circuit
Primary	Tracer		
RED	NONE	R	"+" (battery direct) or "+30" (via battery master switch)
GREEN	RED	GN/R	"+15" ("+30" line via relay controlled by feed/run switch
YELLOW	RED	Y/R	Positive from charging alternator
WHITE	RED	W/R	Indirect positive (between components)
GREEN OR GREY	NONE	GN or GR	Switch connection where a colour code has not been defined, e.g. wiring from a switch to a fuse.
BLUE	NONE	BL	Relay connection "87"
BLUE	BLACK	BL/SB	Relay connection "30"
BLUE	RED	BL/R	Relay connection "86"
BLUE	GREEN	BL/GN	Relay connection "87a"
YELLOW	NONE	Y	Signal, e.g. speed signal
YELLOW	BLACK	Y/SB	Indicator lamps that are positive-activated
WHITE	YELLOW	W/Y	Indicator lamps that are negative-activated
WHITE	GREEN	W/GN	Warning lamps that are negative-activated
WHITE	NONE	W	Ground
WHITE	BROWN	W/BN	Indirect ground (between components)
BLACK	NONE	SB	External systems with their own cabling, e.g. automatic transmissions
BLUE	YELLOW	BL/Y	Equipment installed by the body builder
BLUE	WHITE	BL/W	Indicator lamps installed by the body builder
LIGHT BROWN	NONE	LBN	Spare wiring

How the colours appear on the wiring

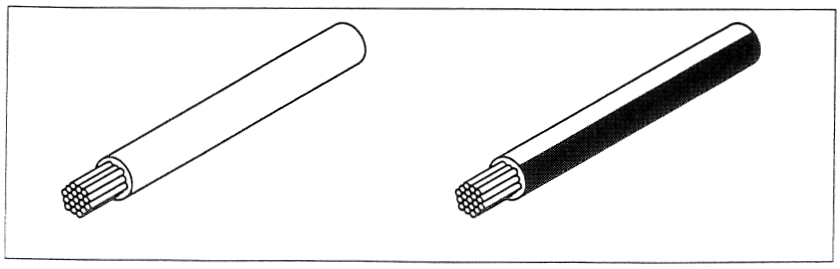

Primary colour only

Primary colour with tracer

9-pin connector and socket numbering

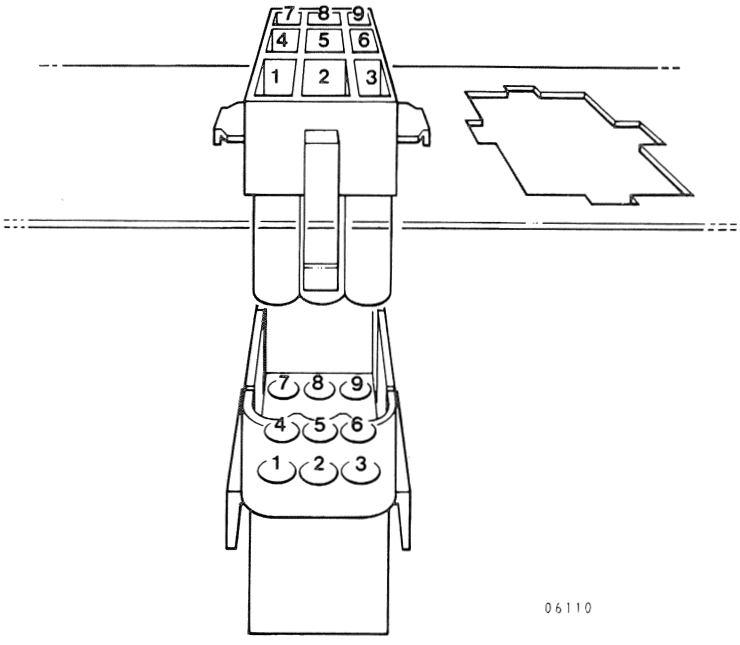

B10B Cable Harness Wiring Table

Area code*	Cable harness identification	Part number	Connections at Electrical centre
1	Instruments	3036390	CK, EA, EF, EG, EI, EM, EN, EO, EP, ER, ET, KF, KG, KH
1	Feed switch	3034422	—
1	Senders	3113986	AT, BB, BVT, EA, EB, EF, EH, EJ, EL, ELB, GA
1	Engine, standard entry	3113987	—
1	Engine, low entry	9515995	—
2	ZF selector switch	9515843	GBX
2	ZF automatic transmission	9516378	—
4	Voith retarder switches	3113991	RET, RG
4	Voith retarder control unit	3113992	RG
2	G7 EGS - Electrical centre to control unit	3036844	—
2	G7 EGS - Electrical centre to circuit board	3036845	EK, GBX
2	G7 EGS - gearbox control unit to gearbox	3037128	EH
1	EDC control unit to instruments	9515842	—
1	EDC control unit to engine	9515841	COM, TC, TEST
1	El. Accelerator throttle to Electrical centre	3037267	EGA, LGV
1	El. Accelerator to Electrical centre	3037268	EGA, LGV, SMT
1	El. Accelerator actuator	3036906	SMT
1	Starting heater with Exhaust gas regulation	3036393	AT, STE
1	Battery box to Electrical battery switch	3113990	BB
1	Battery box to Manual battery switch	3113997	BB
1	Electrical battery switch	3113996	ELB
1	Level control	3113993	CK, H
1	Kneeling and level control	3113994	CK, H, J
1	Kneeling sender	1610962	—
1	Bogie	3113995	EO
3	ABS control unit	3036476	—
3	ABS circuit board to Electrical centre	3036104	ED
3	ABS first axle	3033826	—
3	ABS second axle	3036850	—
1	Fire warning sensor	3036248	—
1	Fire warning sensor	3036249	—
1	Horn	3036245	KA, KB, KD, KH
5	Alternators, 2 x 55A, standard entry	3035701	—
5	Alternators, 2 x 55A, low entry	9515716	—
5	Alternator, 115 or 180A, standard entry	3036604	—
5	Alternator, 115 or 180A, low entry	9515178	—

*** Area code numbers:**

1 General
2 Gearboxes and transmissions
3 ABS system
4 Retarders
5 Alternators

The B10B and B12 electrical centre cable harnesses have the following connections:

EB, ED, EG, EH, EI, EJ, EK, EL, EM, EN, EO, EP, ER, ET, GA, GBX, KE, RET, STE, TC

B12 Cable Harness Wiring Table

Area code*	Cable harness identification	Part number	Connections at Electrical centre
1	Instruments	3036390	CK, EA, EF, EG, EI, EM, EN, EO, EP, ER, ET, KF, KG, KH
1	Feed switch	3034422	—
1	Senders	3113986	AT, BB, BVT, EA, EB, EF, EH, EJ, EL, ELB, GA
1	Engine, standard entry	3113988	—
2	ZF selector switch	9515843	GBX
2	ZF automatic transmission	9516378	—
4	Voith retarder switches	3113991	RET, RG
4	Voith retarder control unit	3113992	RG
2	G7 EGS - Electrical centre to control unit	3036844	—
2	G7 EGS - Electrical centre to circuit board	3036845	EK, GBX
2	G7 EGS - gearbox control unit to gearbox	3037128	—
1	EDC control unit to instruments	9515842	—
1	EDC control unit to engine	9515841	COM, TC, TEST
1	El. Accelerator throttle to Electrical centre	3037267	EGA, LGV
1	El. Accelerator to Electrical centre	3037268	EGA, LGV, SMT
1	El. Accelerator actuator	3036906	SMT
1	Starting heater with Exhaust gas regulation	3036393	AT, STE
1	Battery box to Electrical battery switch	3113990	BB
1	Battery box to Manual battery switch	3113997	BB
1	Electrical battery switch	3113996	ELB
1	Level control	3113993	CK, H
1	Kneeling and level control	3113994	CK, H, J
1	Kneeling sender	1610962	—
1	Bogie	3113995	EO
3	ABS control unit	3036476	—
3	ABS circuit board to Electrical centre	3036104	ED
3	ABS first axle	3033826	—
3	ABS second axle	3036850	—
1	Fire warning sensor	3036248	—
1	Fire warning sensor	3036249	—
1	Horn	3036245	KA, KB, KD, KH
5	Alternators, 2 x 55A	3032007	—
5	Alternator, 115 or 180A	3035214	—

Safety

Always follow the prescribed safety rules when working on a bus electrical system. Open the battery master switch before beginning repair work. Because some circuits are connected directly to the battery, bypassing the battery master switch, the battery cables must be disconnected to ensure that absolutely no current can flow. Remember that the batteries in a bus store a large amount of energy, which can cause severe burns if a short-circuit occurs.

The advanced electronic circuits in modern buses can be destroyed instantly by incorrect connection, and special care must be taken when testing and repairing this type of component and circuit.

If welding is to be carried out, care must also be taken to avoid damage to the electrical and electronic components installed in the bus.

1 Fuses

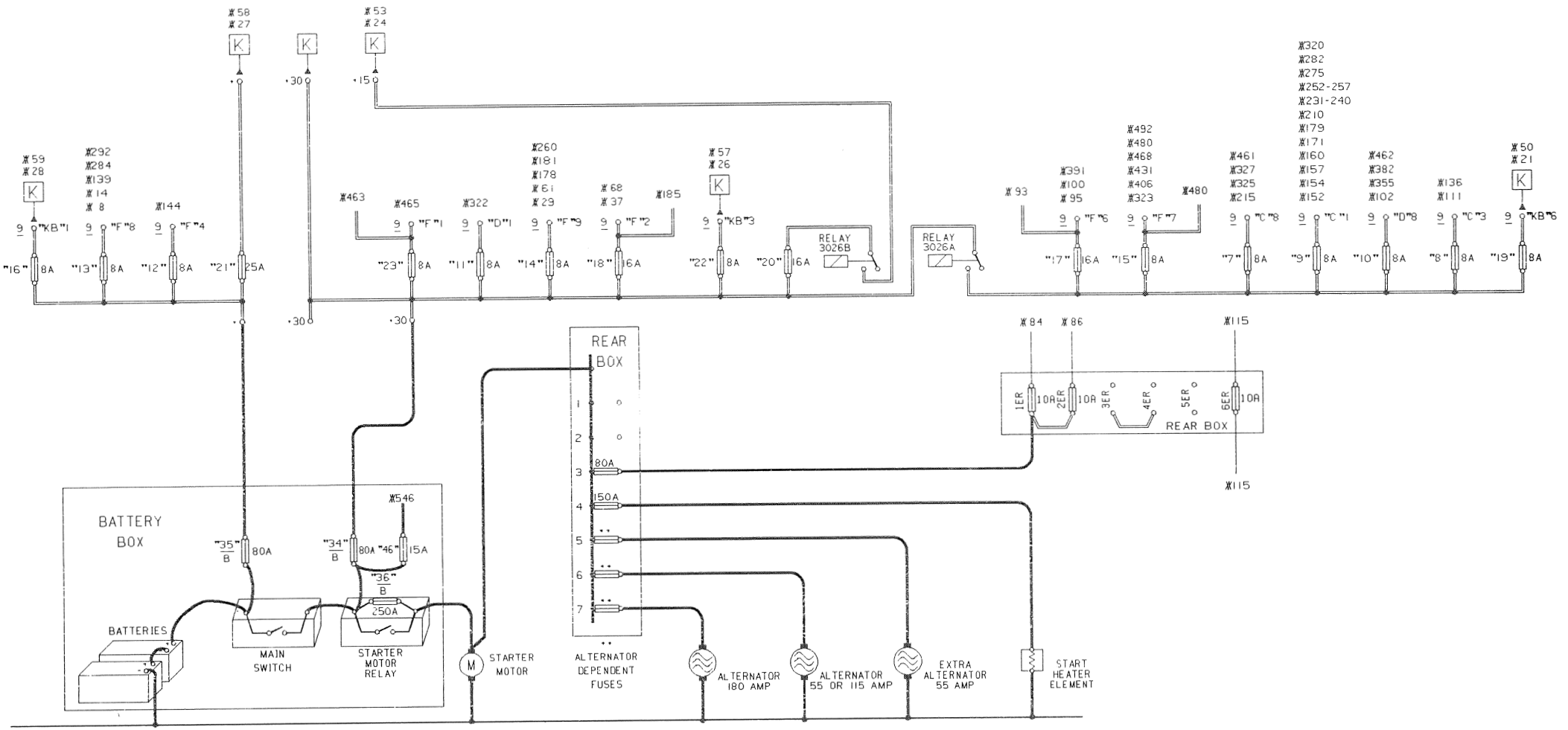
RELAY 3026B
RELAY 3026A
REAR BOX
BATTERY BOX
BATTERIES
MAIN SWITCH
STARTER MOTOR RELAY
STARTER MOTOR
ALTERNATOR DEPENDENT FUSES
ALTERNATOR 180 AMP
ALTERNATOR 55 OR 115 AMP
EXTRA ALTERNATOR 55 AMP
START HEATER ELEMENT
REAR BOX

Fuse	Rating	Circuit protected by fuse
"1"/"2"	8A	Parking lights (KE1)/(KE2), Panel lamps
"3"/"4"	8A	Headlamps, high beam (KE3)/(KE4)
"5"/"6"	8A	Headlamps, low beam (KE5)/(KE6)
"7"	8A	EGS transmission system reversing lights relay, Differential lock and bogie circuits, Indicator lamps
"8"	8A	Preheating control circuit, Engine stop solenoid valve
"9"	8A	Alternator charging warning lamp(s), Instrument gauges, Fire warning lamps, Speedometer, Tachograph, Central warning lamps, Coolant level warning circuit
"10"	8A	Transmission start inhibit circuits, ZF reversing lights relay, ZF transmission, Volvo G7 EGS transmission
"11"	8A	Fire warning control system
"12"	8A	Fuel cut-off control unit
"13"	8A	Battery master switch control system, Emergency fuel cut-off control system, Clock/odometer
"14"	8A	Feed switch, Buzzer, Parking brake warning, Voltmeter
"15"	8A	Level control and kneeling systems, Voith hydraulic braking retarder system, ABS control system, Air drier
"16"	8A	"+" to body circuits (via KB1)
"17"	16A	Starting control circuit, Transmission start position relay
"18"	16A	Headlamps, parking lights and panel lamps
"19"	8A	+15 to body circuits (via KB6)
"20"	16A	+15 to body circuits, via relay (3026B)
"21"	25A	"+" to body circuits
"22"	8A	"+" to body circuits (via KB3)
"23"	8A	Brake lights, Electrical accelerator
"32"	75A/150A/200A	Alternator polarity protection
"33"	150A	Starting heater element
"34"	80A	+30 line main fuse
"35"	80A	Electrical battery circuit breaker
"36"	250A	Starter motor
"40"	8A	ABS control unit feed 1
"41"	8A	ABS control unit feed 2
"43"	5A	Volvo G7 EGS transmission control unit
"44"	5A	EDC controls and EDC back-up power
"45"	15A	EDC system
"46"	15A	EDC back-up power
"1ER"	16A	Starter solenoid
"2ER"	8A	Starting control circuit
"6ER"	5A	Engine preheating timer relay
EGS	5A	EGS transmission start position circuit
F1	5A	Lamp check circuit

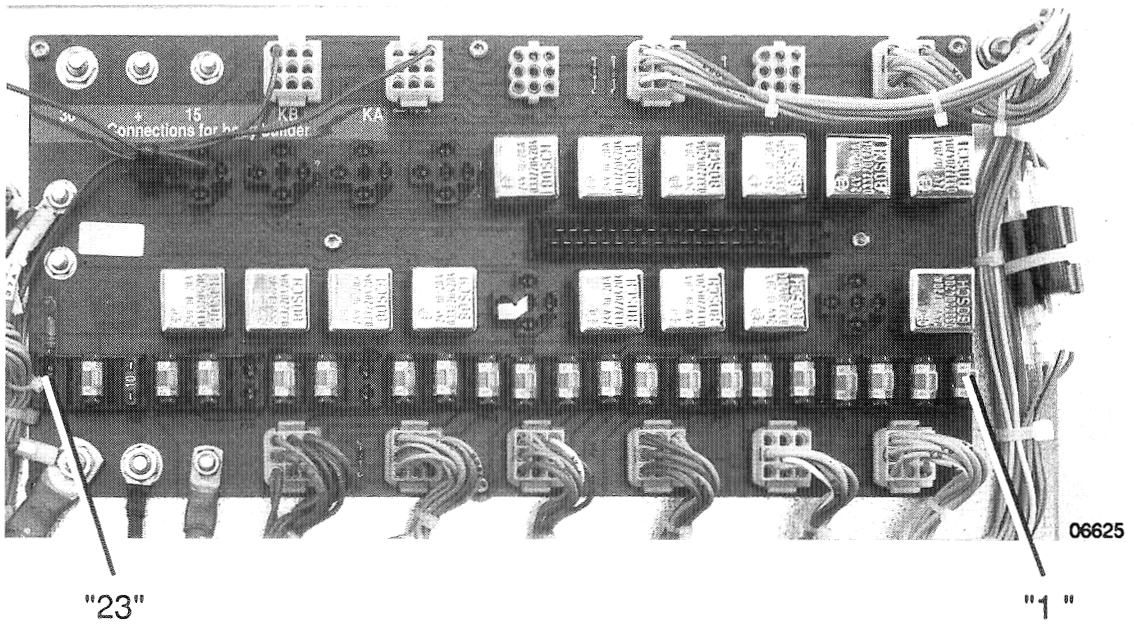

Fuses in the main electrical centre

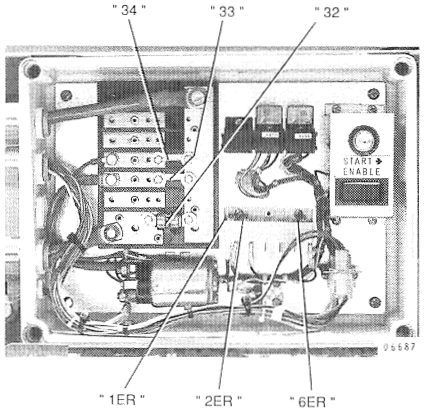

Fuses in the rear electrical centre
(This shows B10B version,
B12 is similar)

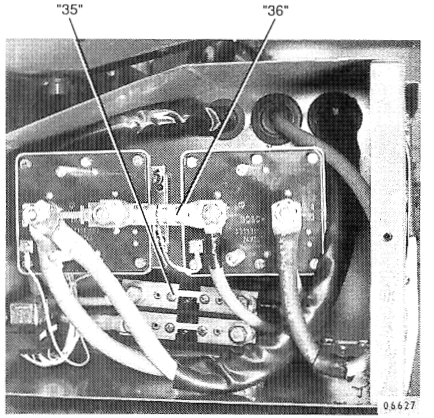

Fuses in the battery box compartment

2 Chassis and cable harness ground connections

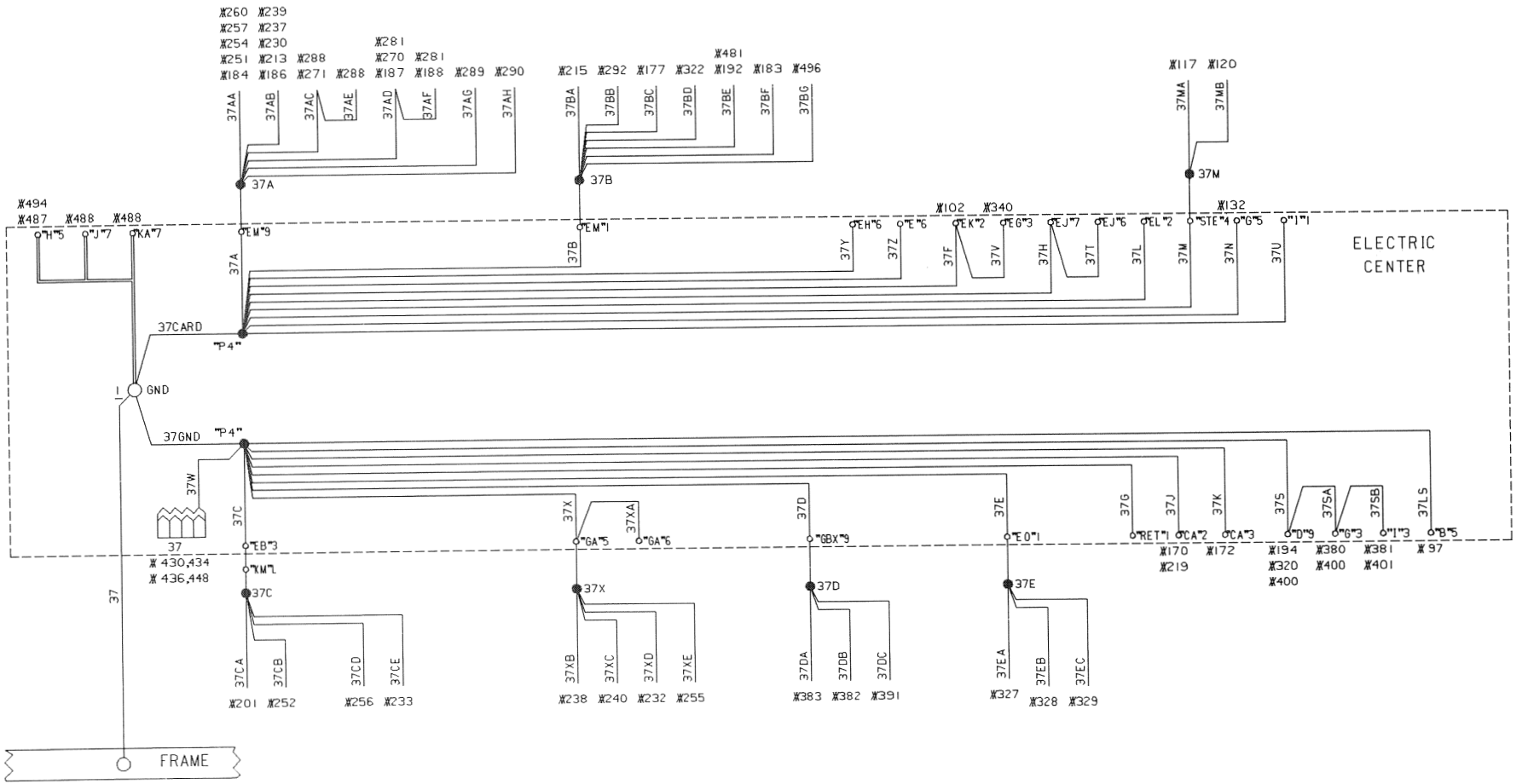

O FRAME Welded nut near battery box

"1" GND M6 screw in electrical centre printed circuit board

P4 Cable harness ultrasonic welded connector

NOTE: The grounding cable numbered 37 connecting **1 GND** on the electrical centre to the chassis frame **must provide a solid ground.**

Ultrasonic welded connectors

37A, 37B	Inside instrument panel	37E	In bogie cable harness
37C	In sensor cable harness	37M	In starting heater harness
37D	In transmission cable harness	37X	In sensor cable harness

Schematic diagrams, circuit descriptions and component locations

3 Battery, battery circuit breakers

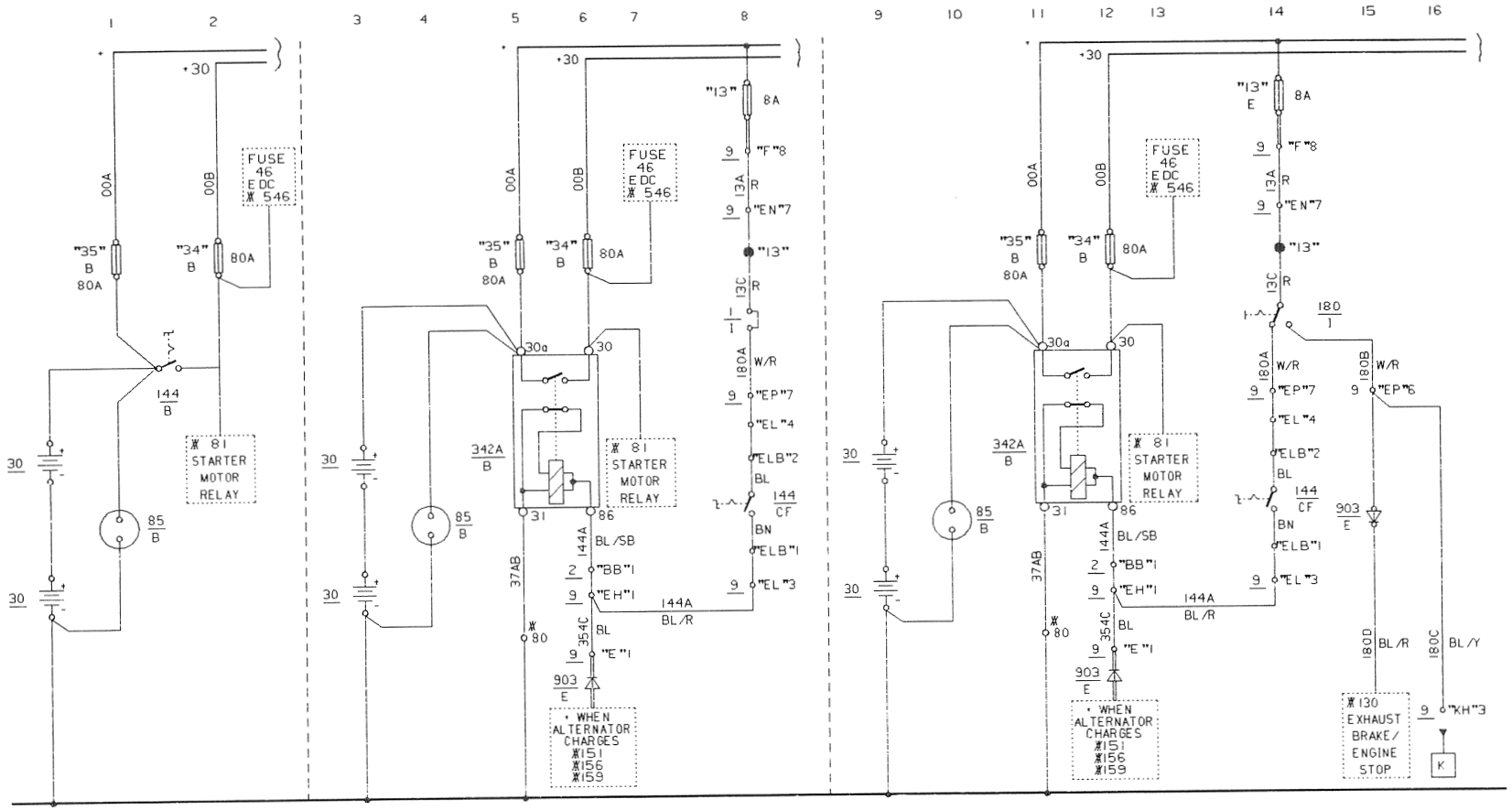

Manual battery circuit breaker (alternative)

Electrical battery circuit breaker (alternative)

Electrical battery circuit breaker (with emergency cut-out switch)

Electrical centre, connectors

EA	GA	EB	ED	EE
EF	AT	**EH**	EJ	EK

CK	**EL**	EM	**EN**	EO
RET	STE	ER	EI	ET

EP	GBX	KE	KF	**KH**
EG		TC	KG	

Fuse	Rating	Circuit protected by fuse
"13"	8A	Battery master switch control system
"34"	80A	+30 line main fuse
"35"	80A	Electrical battery circuit breaker

No.	Component
1	Jumper (alternative to emergency cut-out switch)
30	Battery
85	Fast charging socket
144	Battery master switch
180	Emergency cut-out switch
342A	Electrical battery master switch
903	Diode

Circuit descriptions

Electrical battery circuit breaker

When the master switch (144) in current path 8 closes, electrical battery master switch (342A) is energized, opening its lower contact and closing its upper contact. A holding winding in (342A) keeps it energized. When the engine starts, voltage from the alternator (the first alternator only, where two alternators are fitted), keeps the holding winding energized.

The upper contact of electrical battery master switch (342A) supplies the +30 line via fuse "34" to the distribution rail in the rear electrical centre, providing excitation voltage from the batteries to the alternator(s) and starter motor when starting, and charging current (in the opposite direction) to the batteries from the alternator(s) when running.

Electrical battery circuit breaker with emergency cut-out switch

If the emergency cut-out switch (180) in current path 14 is operated, the supply to electrical switch (342A) holding winding is removed and it de-energizes, to remove the supply from the +30 line distribution rail.

Simultaneously the engine stop circuits are energized via switch (180), which also supplies "+" to the body connector KH3.

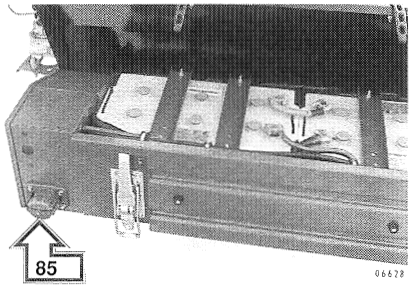

85 Fast charging socket on side of battery box

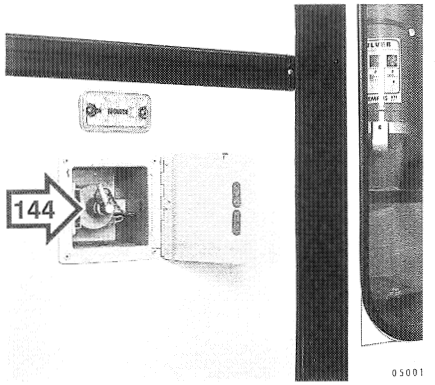

144 Battery master switch

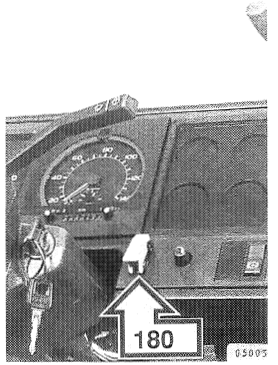

180 Emergency cut-out switch

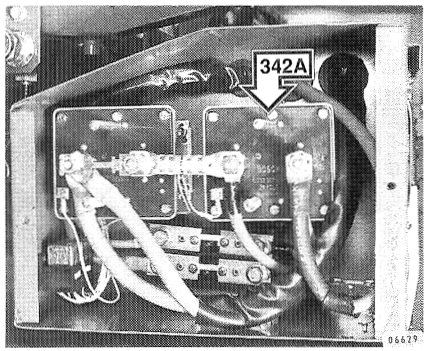

342A Electrical battery master switch

4 Feed switch, lighting switch

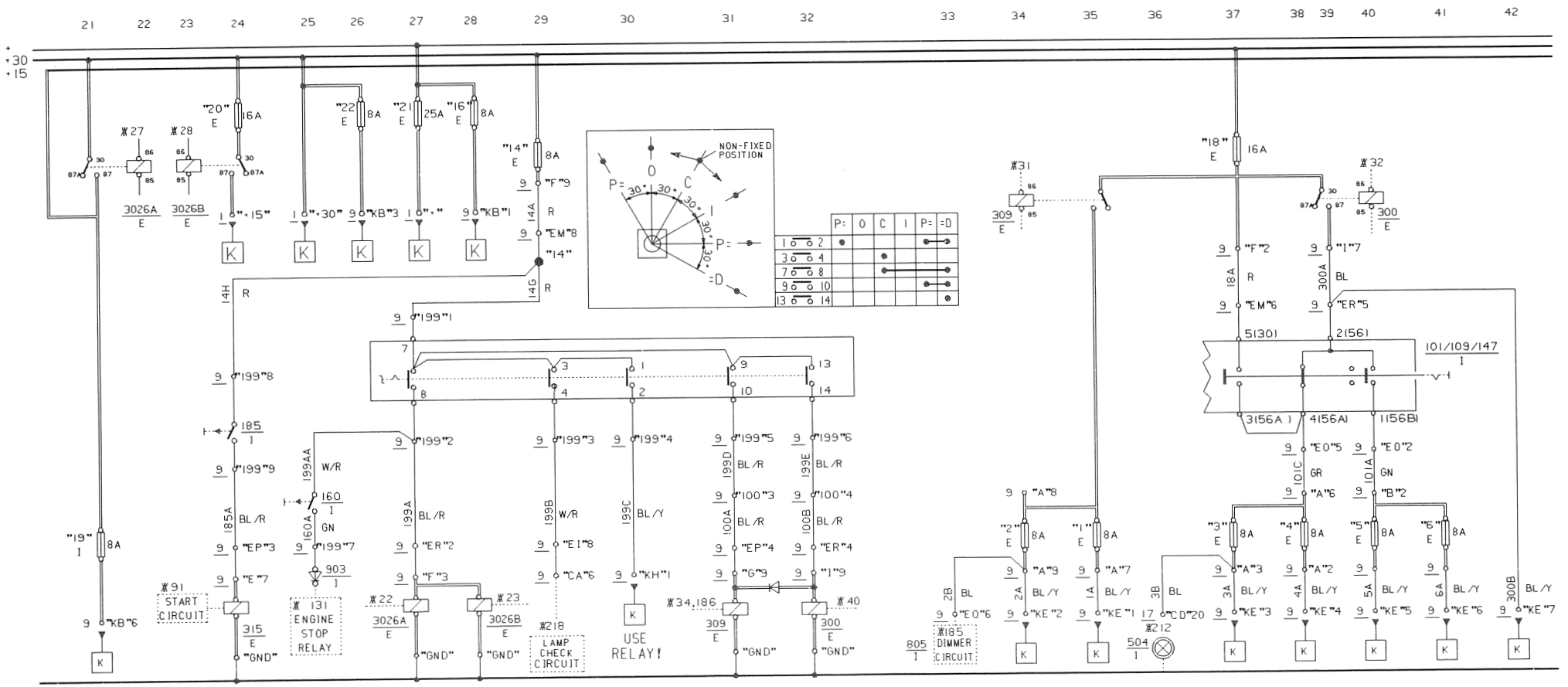

Feed switch

High/low beam switch

Electrical centre, connectors

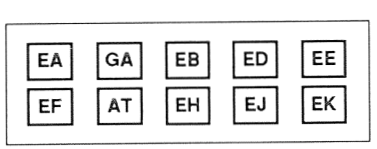

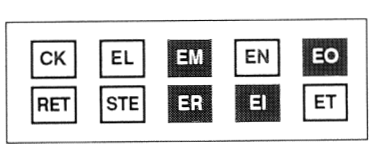

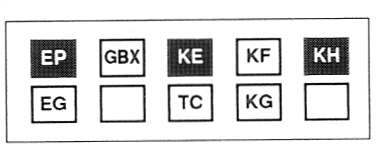

Fuse	Rating	Circuit protected by fuse
"1"	8A	Parking lights (KE1)
"2"	8A	Parking lights (KE2)
"3"	8A	Headlamps, high beam (KE3)
"4"	8A	Headlamps, high beam (KE4)
"5"	8A	Headlamps, low beam (KE5)
"6"	8A	Headlamps, low beam (KE6)
"14"	8A	Feed switch circuits
"16"	8A	"+" to body circuits (via KB1)
"18"	16A	Headlamps, parking lights and panel lamps
"19"	8A	+15 to body circuits (via KB6)
"20"	16A	+15 to body circuits, via relay (3026B)
"21"	25A	"+" to body circuits
"22"	8A	"+" to body circuits (via KB3)

No.	Component
101/109/147	High/low beam switch
160	Engine stop button
185	Engine start button
199	Feed switch
300	Headlamps relay
309	Parking lights relay
315	Starting switch relay
504	High beam indicator lamp
3026A	Feed switch relay
3026B	Auxiliary feed switch relay (for body circuits)

Circuit description

The chart shows the feed switch (199) terminal connections. Switch contacts 1 and 2 are connected with the switch in the "P=" (destination sign lighting only), "P=" (parking lights) and "=D" (high/low beam) positions. In the "C" (check lamps) position contacts 3 and 4 close to supply the lamp check circuit, and contacts 7 and 8 close to energize relays (3026A and B). The (3026A) relay contact supplies KB6 via fuse "19", while the (3026B) relay contact supplies the +15 line circuits in the body. These two relays are also energized with the switch set to "1" (el. centre feed), "P=" and "=D". Contacts 9 and 10 are connected in the "P=" and "=D" positions, energizing relay (309) to supply the panel lamps and parking lights via fuses "1" and "2". In the "=D" position contacts 13 and 14 are also connected, supplying the headlamps via switch (101) and fuses "3" to "6" inclusive.

Buses equipped with a feed switch (max. rated current 16A) use buttons (185) and (160) for starting and stopping the engine (see Schematic 8).

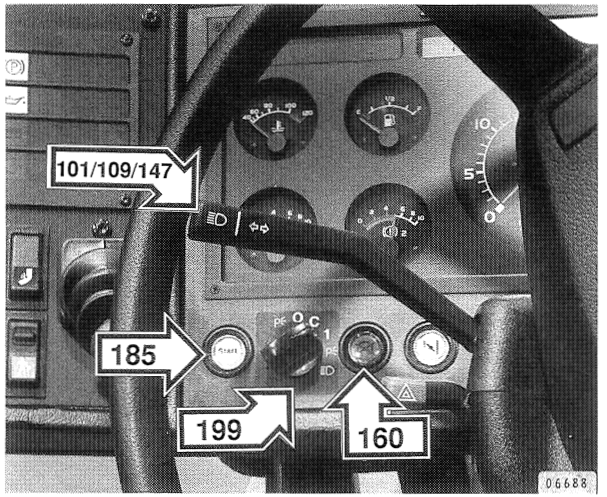

101/109/147 High/low beam switch,
160 Engine stop button,
185 Engine start button, 199 Feed switch

5 Keystart switch, lighting switch, high/low beam switch

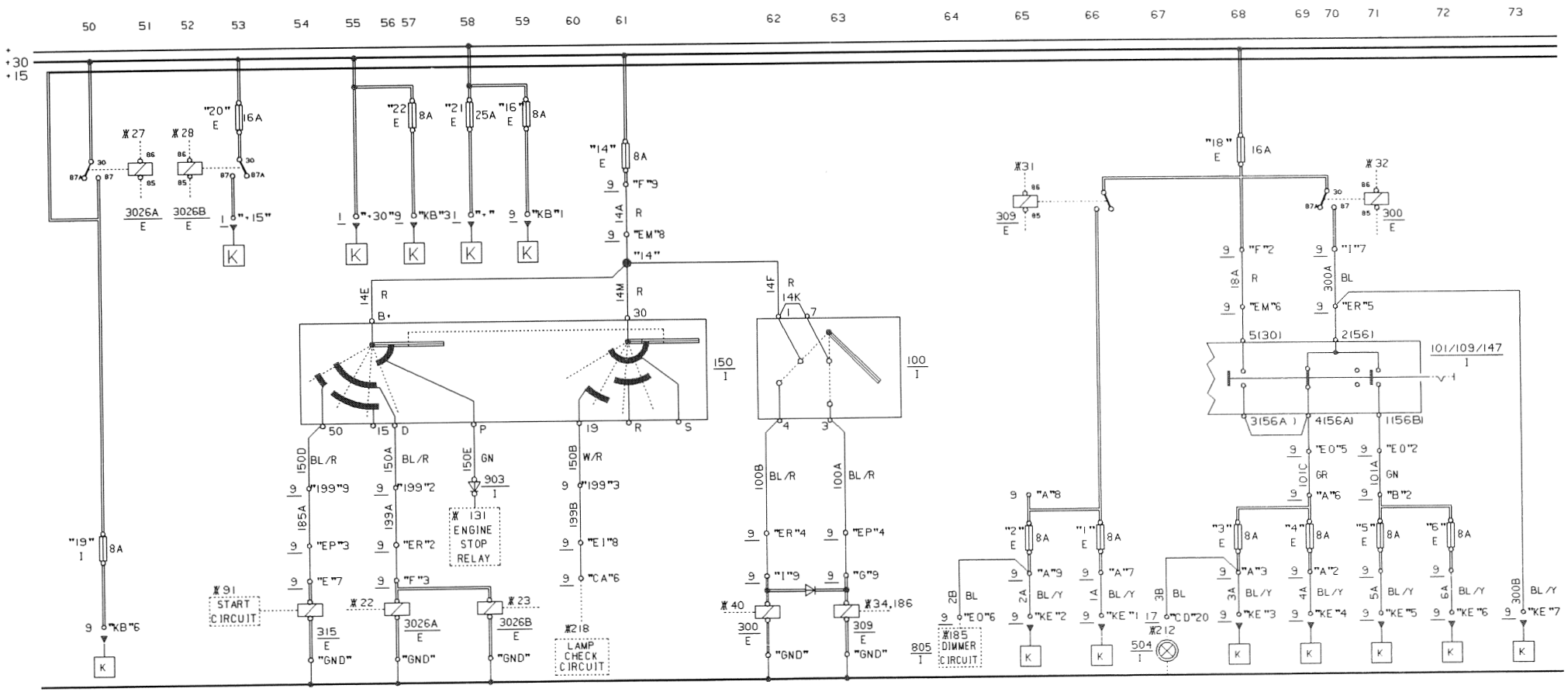

Electrical centre, connectors

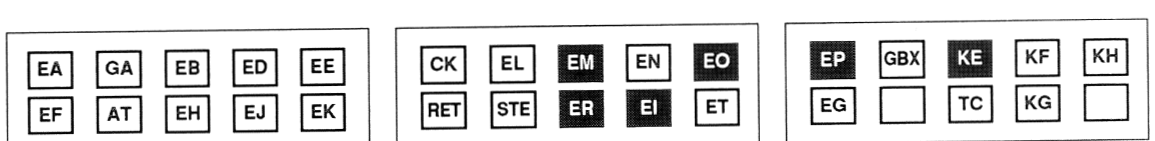

Fuse	Rating	Circuit protected by fuse
"1"	8A	Parking lights (KE1)
"2"	8A	Parking lights (KE2)
"3"	8A	Headlamps, high beam (KE3)
"4"	8A	Headlamps, high beam (KE4)
"5"	8A	Headlamps, low beam (KE5)
"6"	8A	Headlamps, low beam (KE6)
"14"	8A	Keystart switch
"16"	8A	Body circuits (via KB1)
"18"	16A	Headlamps, parking lights and panel lamps
"19"	8A	Body circuits (KB6)
"20"	16A	+15 body circuits, via relay (3026B)
"21"	25A	"+" body circuits
"22"	8A	"+" to body circuits (via KB3)

No.	Component
100	Lighting switch
101/109/147	High/low beam switch
150	Keystart switch
300	Headlamps relay
309	Parking lights relay
315	Starting switch relay
504	High beam indicator lamp
903	Diode
3026A	Keystart switch relay
3026B	Auxiliary keystart switch relay

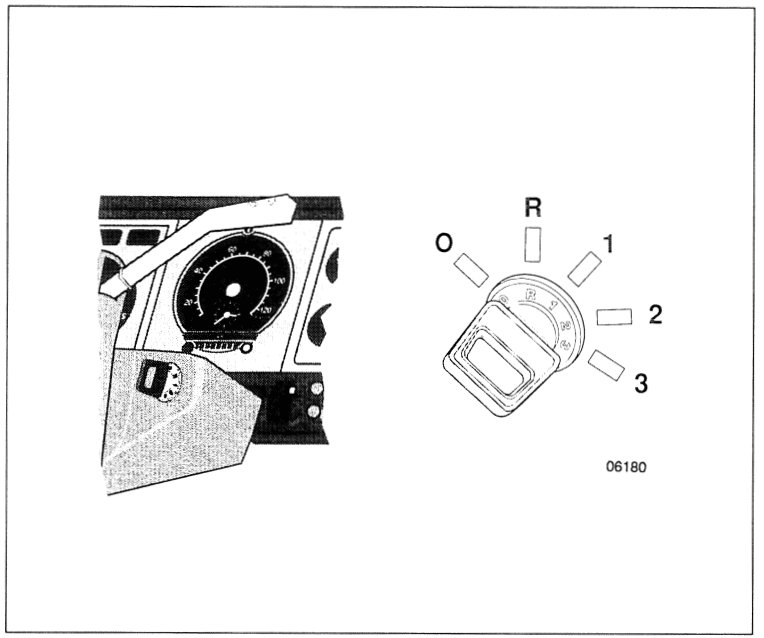

150 Keystart switch and selection positions

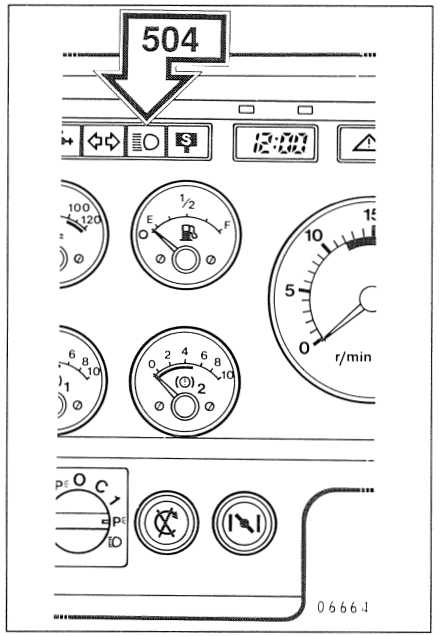

504 High beam indicator lamp

Circuit description

The keyswitch (150) positions are: "0", neutral and steering lock for key stop buses; "R", radio only; "1", the driving position; "2", lamp checking and "3", starting (positions "2" and "3" being spring-loaded). Position "R" connects switch terminal B+ to P, supplying the engine stop relay via a diode (903) (see Schematic 8); "1" connects B+ to D, energizing relays (3026A) and (3026B); "2" connects switch terminal 30 to 19, supplying the lamp check circuit (see Schematic 11); "3" connects B+ to 50, energizing relay (315) in the starting circuit.

Buses with a key start switch have a separate lighting switch (100), which energizes relay (300) for headlamps and relay (309) for panel lamps and parking lights. See Schematic 4 for the lighting circuit description.

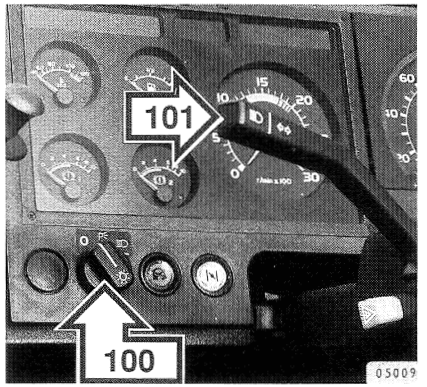

100 Lighting switch
101/109/147 High/low beam switch

6 Starting circuit and transmission neutral switches (Sheet 1 of 2)

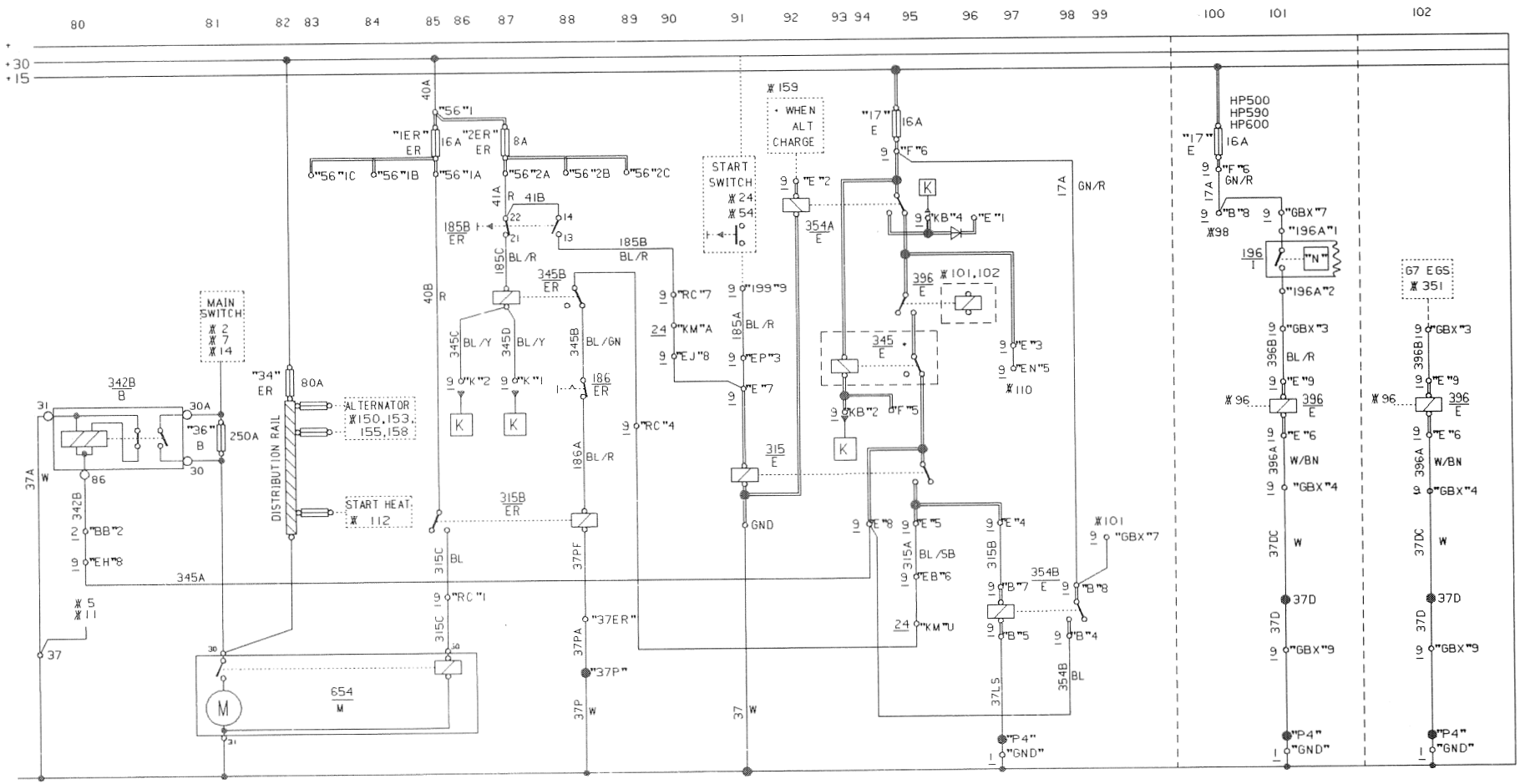

Starting circuit

Transmission neutral switches

Electrical centre, connectors

EA	GA	EB	ED	EE
EF	AT	EH	EJ	EK

CK	EL	EM	EN	EO
RET	STE	ER	EI	ET

EP	GBX	KE	KF	KH
EG		TC	KG	

Fuse	Rating	Circuit protected by fuse
"17"	16A	Starting control circuit
"34"	80A	+30 Distribution rail
"36"	250A	Starter motor
"1ER"	16A	Starter solenoid
"2ER"	8A	Starting control circuit

No.	Component
185B	Engine start switch in rear electrical centre
186	Engine start enable switch in rear electrical centre
196	ZF gear selector switches
315	Starting switch relay
315B	Starter solenoid control relay
342B	Starter motor circuit breaker
345	Start inhibit relay
345B	External start inhibit relay
354A	Starting position relay
354B	Auxiliary starting position relay (socket marked 3029)
396	Transmission start position (neutral) relay
654	Starter motor

Circuit description

Refer to current path 91. When the start button is pressed or the keyswitch is turned to the start position, starting switch relay (315) is energized. Its contact completes the circuit to the starter solenoid control relay (315B), and this provides current to the starter motor solenoid (654) if the following conditions are met:

(a) The engine has not started, so that no current is being generated by the alternator and relay (354A) is de-energized.

(b) The transmission is in neutral, so relay (396) is energized (see current paths 100-102).

(c) There is no start inhibit (ground connection) from body connectors KB2 or F5, so that the start inhibit relay (345) is not energized. Alternatively, relay (345) has been replaced by the optional link that simulates a closed contact.

(d) The start switch (185B) is set to off and the engine compartment door microswitches have not grounded body connections K1 and K2 so that the external start inhibit relay (345B) is not energized.

(e) The engine start enable switch (186) in the rear electrical centre is set to "enable".

(Continued on page 27)

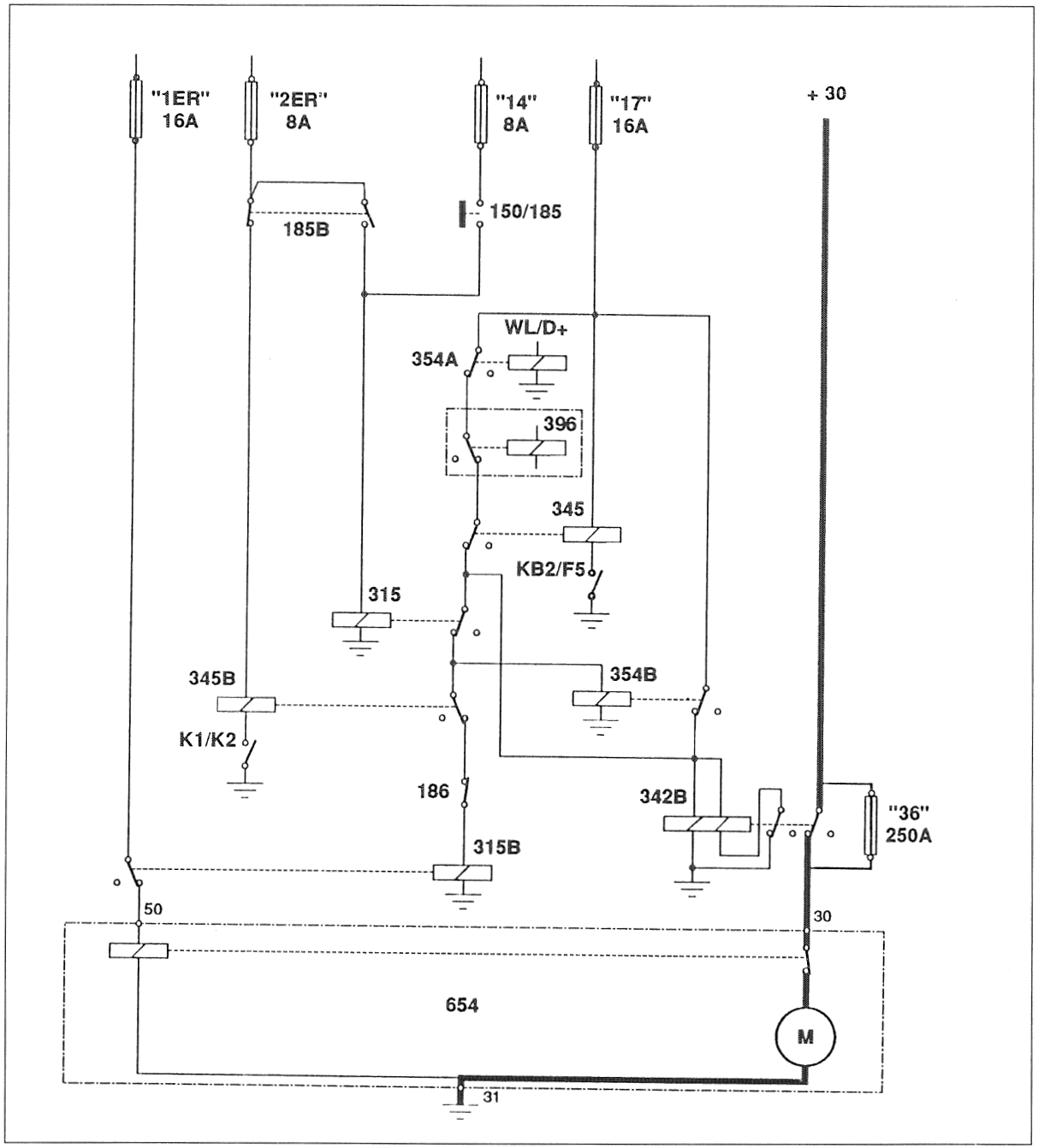

Starting relay sequence

6 Starting circuit and transmission neutral switches (Sheet 2 of 2)

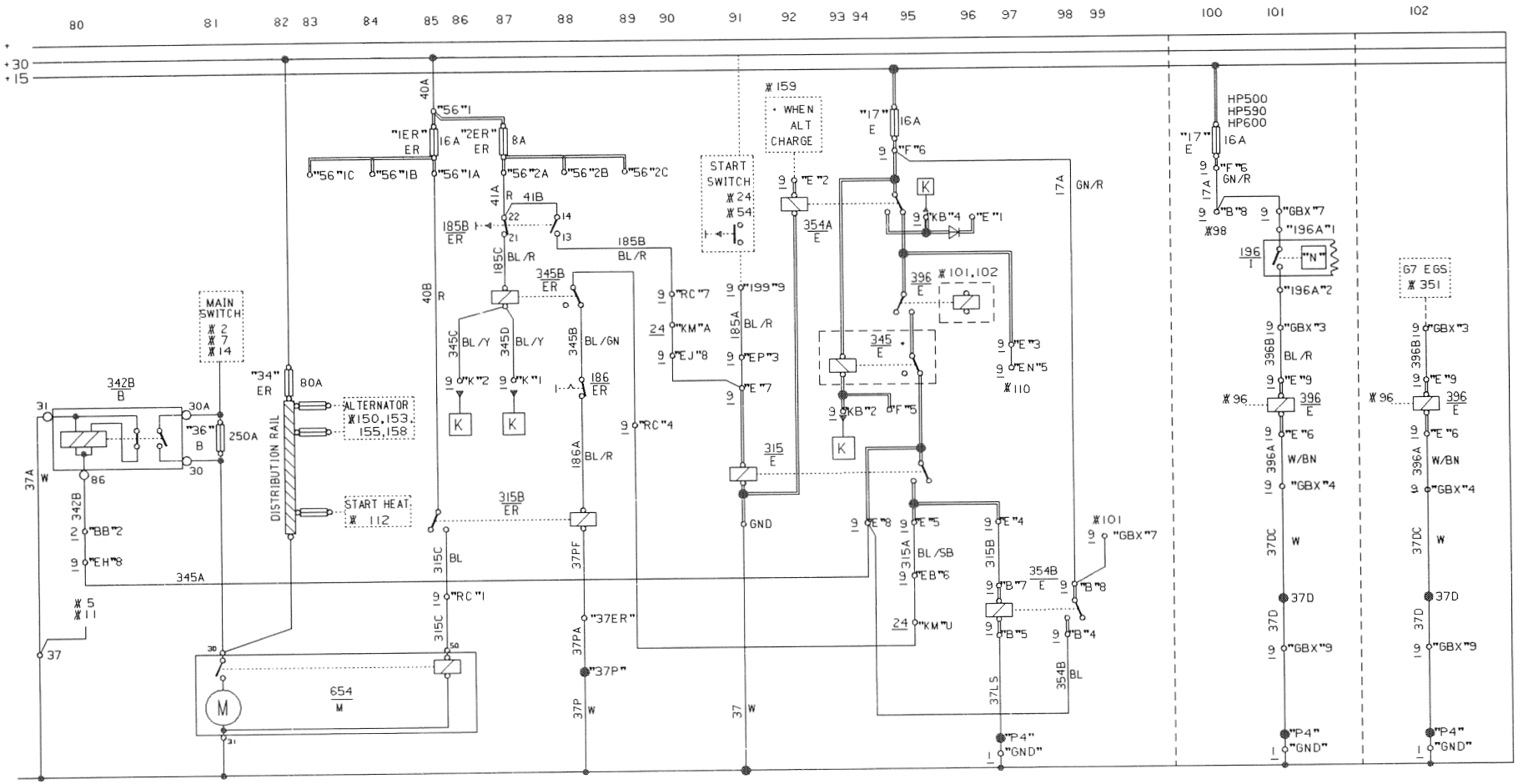

Starting circuit

Transmission neutral switches

Electrical centre, connectors

EA	GA	EB	ED	EE
EF	AT	EH	EJ	EK

CK	EL	EM	EN	EO
RET	STE	ER	EI	ET

EP	GBX	KE	KF	KH
EG		TC	KG	

(Continued from page 25)

Because conditions (a), (b) and (c) above are met, the starter motor circuit breaker (342B) can energize, supplying current to the starter motor, as long as the mechanical battery master switch (144) is closed or the electrical battery master switch (342A) is energized (schematic 3, current path 2, 7 or 14).

If the alternator begins to deliver current before the engine has started properly, relay (354A) will energize and its contact will open. However, by this time the auxiliary starting position relay (354B) will have energized and acts as a holding relay. The current via its own contact and relay (315) closed contact keeps itself energized and provides an alternative path to keep the starter motor circuit breaker (342B) energized, even though relay (354A) contact is now open.

After the engine has started

When the engine starts properly, the alternator current energizes relay (354A) its contact switches over and de-energizes the starter solenoid circuit, since the starter button or keyswitch have been released and de-energized relay (315) to break the relay (354B) holding circuit. This de-energizes the starter motor circuit breaker (342B) to switch off the current to the starter motor.

EGS G7 Start inhibit (see also schematic 18)

The engine will only be allowed to start if the gear lever and gearbox are in neutral (or the clutch pedal is depressed), and the engine speed is less than 300 rpm. This will ensure a ground path (schematic 18, current path 351) for the polarity switching relay (3038A). This relay energizes and its contact closes to energize relay (396) in current path 102, allowing current to flow via current path 95 to the starter solenoid control relay (315B), if all the other starting conditions are correct.

When the engine speed reaches 800 rpm, the input signal from the tachometer sensor will be interrupted, to ensure that relay (396) is not activated every time the gear lever and gearbox pass through the neutral position. When the EGS emergency board is being used, gearbox position signals are not provided, so the gear lever must be in neutral and the clutch depressed before the engine can be started.

For further details of the following transmission neutral switches (in current paths 100-102), refer to the respective transmission schematics:

Schematic 18	**Volvo G7 EGS**
Schematic 19	**ZF HP 500/590/600**

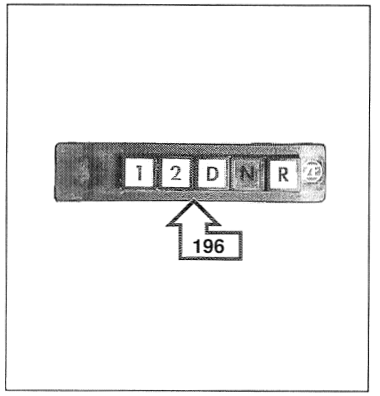

196 ZF gear selector switches

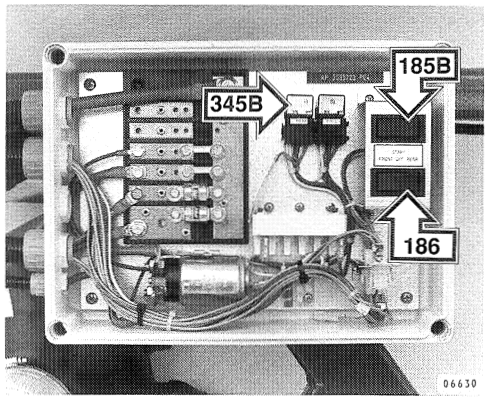

B10B rear electrical centre (B12 is similar), 185B Start switch, 186 Engine start enable switch, 345B External start inhibit relay

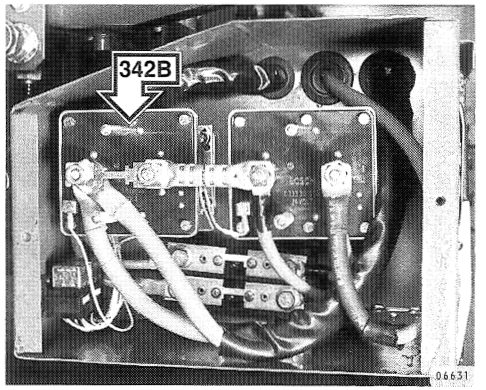

342B Starter motor circuit breaker in battery box

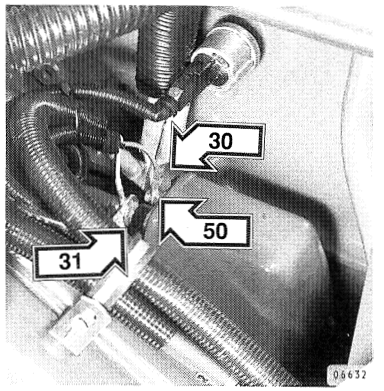

654 Starter motor (B12 shown)

7 Preheating and exhaust gas pressure regulator solenoid circuits

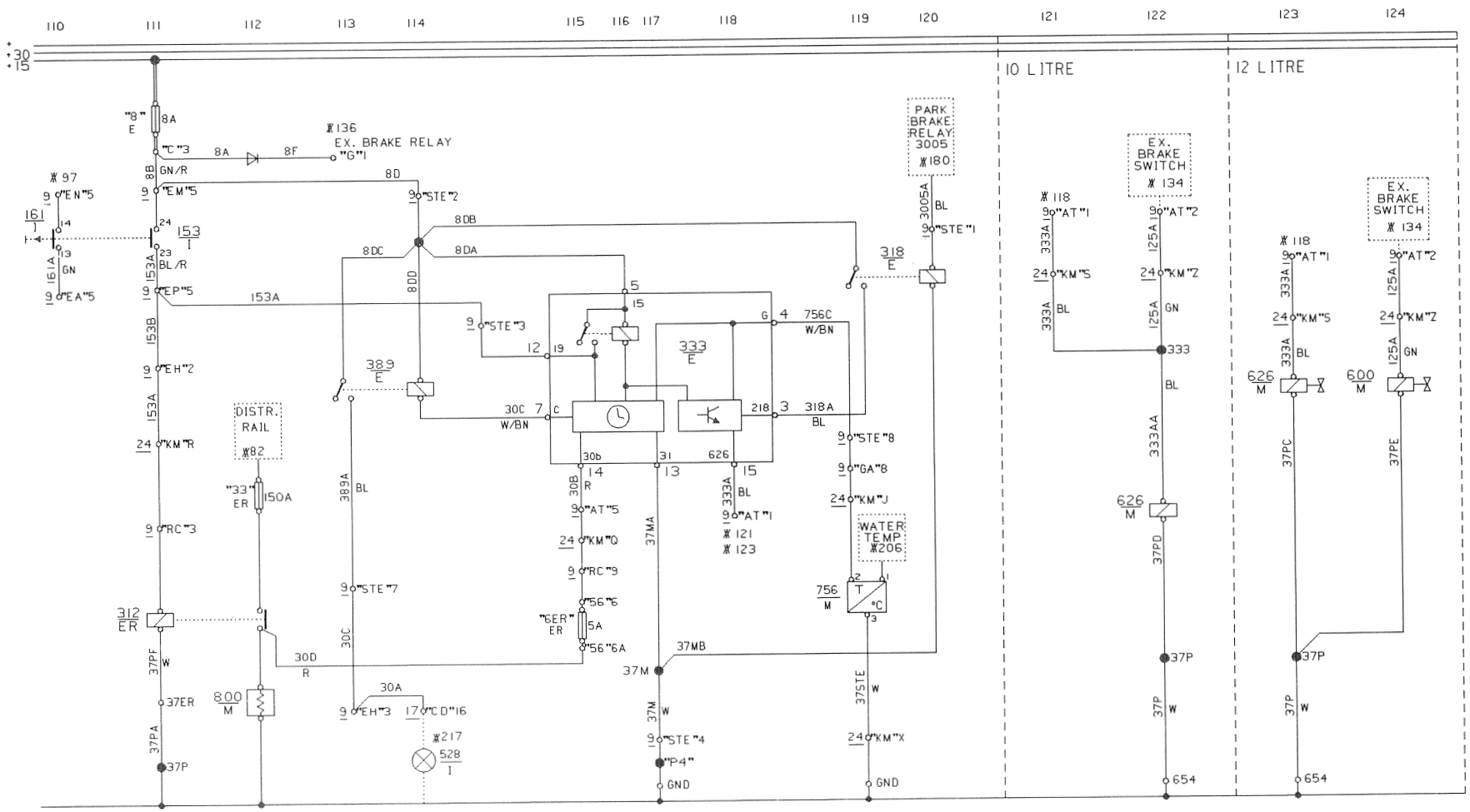

Electrical centre, connectors

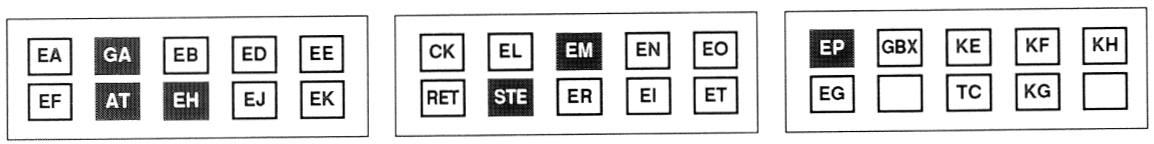

Fuse	Rating	Circuit protected by fuse
"8"	8A	Engine preheating control circuit
"33"	150A	Starting heater element
"6ER"	5A	Engine preheating timer relay

No.	Component
153	Cold start button
312	Starting heater relay
318	Exhaust gas pressure regulator relay
333	Engine preheating timer relay
389	Starting heater indicator lamp relay
528	Starting heater indicator lamp
600	Exhaust braking solenoid valve (B12 only)
626	Exhaust gas pressure regulator solenoid valve
756	Engine coolant temperature sender
800	Starting heater element

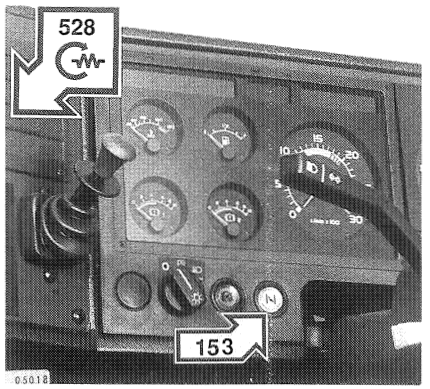

153 Cold start button
528 Starting heater indicator lamp

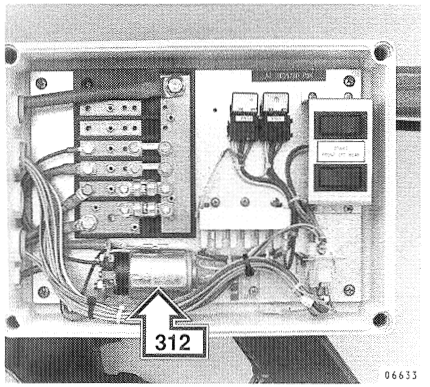

312 Starting heater relay

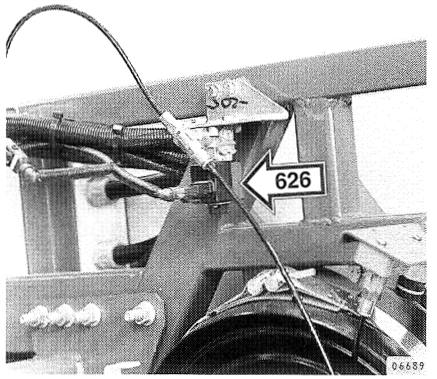

626 Exhaust gas pressure regulator solenoid valve (B10B)

Circuit descriptions

Cold starting

After the engine preheat button (153) has been pressed and released, the starting heater relay (312) energizes to switch on the starting heater element (800). This remains energized for a period up to 50 seconds depending on the electronic timer relay (333). The length of time is determined by the engine coolant temperature (see the graph) as the timer relay (333) receives a temperature signal from the engine coolant temperature sender (756), and will only keep the heater element (800) energized for the maximum of 50 seconds if the coolant temperature is below -10°C. While the heater element (800) is energized, the timer relay (333) also keeps relay (389) energized to light the starting heater indicator lamp (528).
Note that switch (153) has two poles, the other being numbered (161). This part of the switch is not used in B10B or B12 buses.

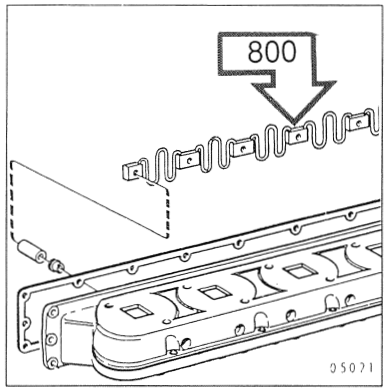

800 Starting heater element (B10B)

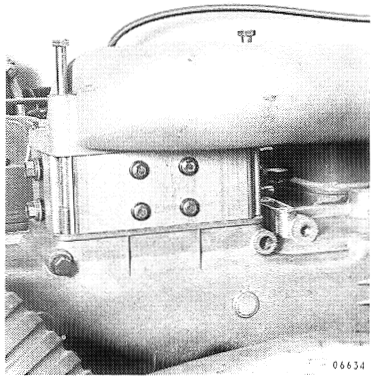
800 Starting heater element (B12)

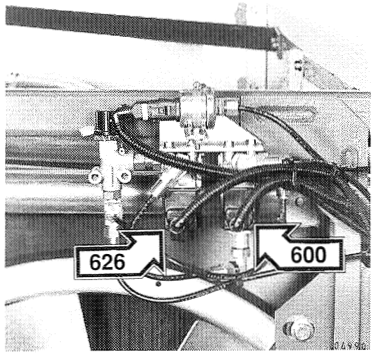

600 Exhaust braking solenoid valve
626 Exhaust gas pressure regulator solenoid valve (B12)

Exhaust gas pressure regulator and exhaust braking

The timer relay (333) also controls the exhaust gas pressure regulator system, receiving a signal from relay (318) contact that is closed when the engine is running and the parking brake is on, and then energizing the exhaust gas pressure solenoid valve (626). This provides back pressure in the exhaust system and speeds up engine warming after starting. Exhaust braking uses the same method, the back pressure slowing the engine down.

B12 buses have an additional exhaust braking solenoid valve (600) (see also schematic 8). This applies a higher pressure to the exhaust gas regulator, since this engine will warm up quickly enough with a lower pressure, controlled by the regulator solenoid valve (626).

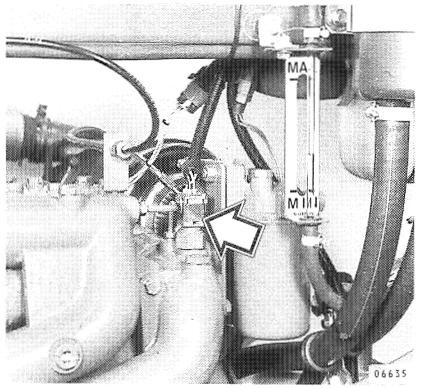

756 Engine coolant temperature sender (B12)

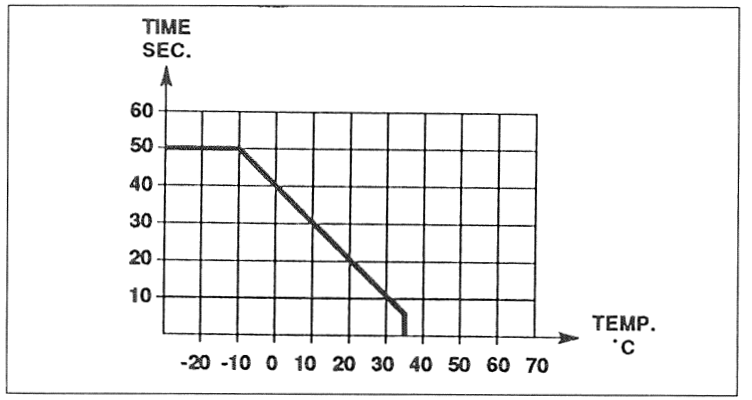

Engine preheating time versus temperature diagram

8 Exhaust brake relay, engine stop and emergency fuel cut-off

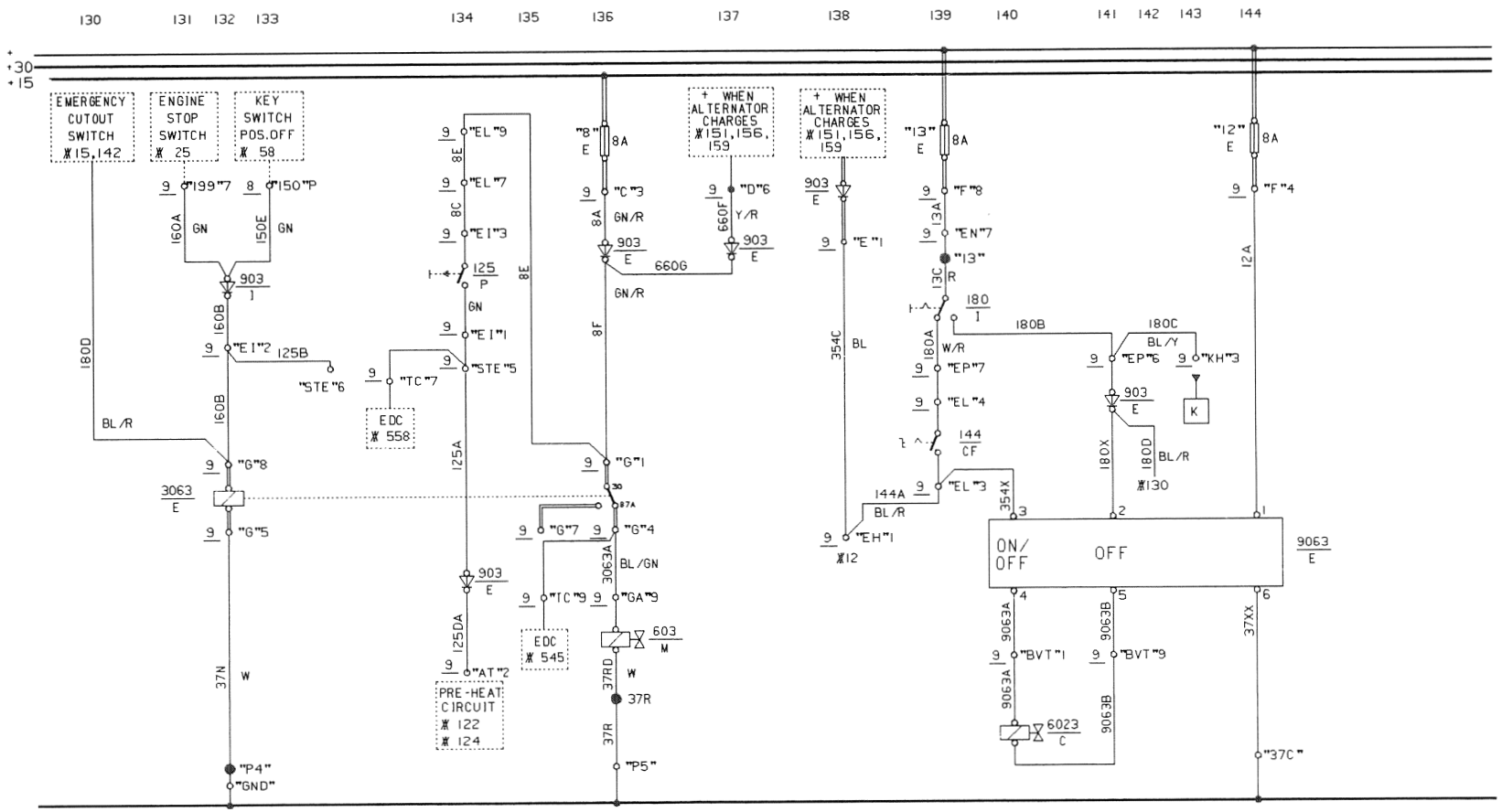

Exhaust brake relay and engine stop solenoid valve

Emergency fuel cut-off

Electrical centre, connectors

EA	GA	EB	ED	EE
EF	EG	EH	EJ	EK

CK	EL	EM	EN	EO
RET	STE	ER	EI	ET

EP	GBX	KE	KF	KH
EG		TC	KG	

Fuse	Rating	Circuit protected by fuse
"8"	8A	Engine stop solenoid valve
"12"	8A	Fuel cut-off control unit
"13"	8A	Emergency fuel cut-off control system

No.	Component
125	Exhaust brake switch
144	Battery master switch
180	Emergency cut-out switch
603	Engine stop solenoid valve
903	Diode
3063	Engine stop/exhaust brake relay
6023	Fuel cut-off solenoid valve
9063	Fuel cut-off control unit

Circuit description

Exhaust brake and engine stop system

With the engine running, relay (3063) is de-energized, its contact providing current to the engine stop solenoid valve (603), permitting the engine to run by blocking the pneumatic supply to the stop system. If the emergency cut-out switch (current path 15 or 142) or the engine stop button (current path 25) are pressed, or the keystart switch (current path 58) is set to off, relay (3063) energizes and breaks the current to the solenoid valve (603). This admits air to the stop system to stop the engine. If fuse "8" blows, the alternator D (or WL) terminal continues to supply voltage to the engine stop circuit.

The exhaust brake switch (125) in current path 134 energizes the exhaust brake relay in current path 122 or 124 (B10B or B12 buses respectively).

Emergency fuel cut-off

When the battery master switch (144) is on and the engine is running, with the alternator charging (current path 138), the voltage input at control unit (9063) terminal 3 is fed via terminal 4 to energize the fuel cut-off solenoid valve (6023), since terminal 5 is normally grounded. This is the normal condition, with (6023) energized.

If the emergency cut-out switch (180) is pressed, control unit (9063) terminal 2 receives a positive signal that de-energizes the fuel cut-off solenoid valve (6023) and thereby shuts off the flow of fuel to the engine.

ENGINE EXHAUST BRAKE AND STOP SYSTEM

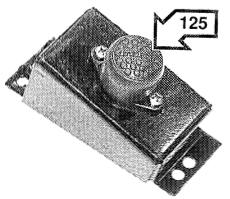

125 Exhaust brake switch

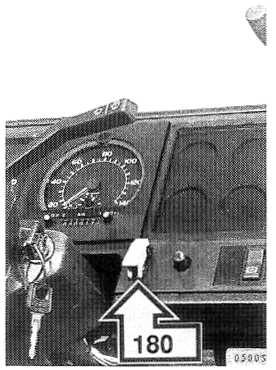

180 Emergency cut-out switch

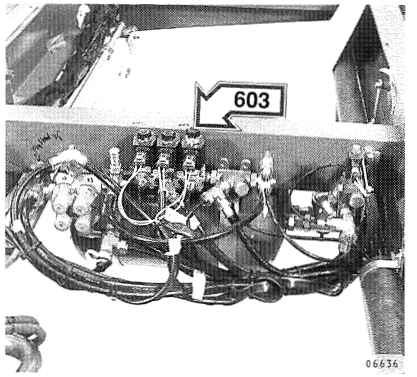

603 Engine stop solenoid valve

EMERGENCY FUEL CUT-OFF SYSTEM

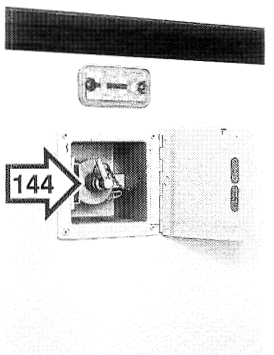

144 Battery master switch

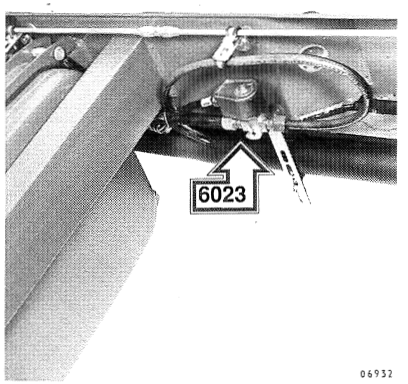

6023 Fuel cut-off solenoid valve

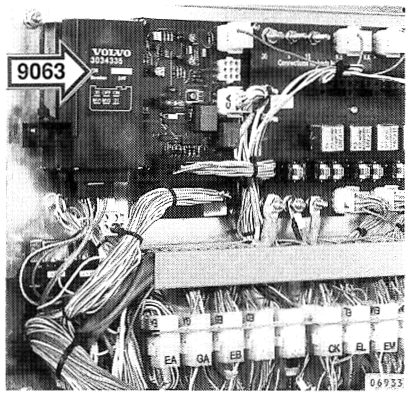

9063 Fuel cut-off control unit

9 Alternators

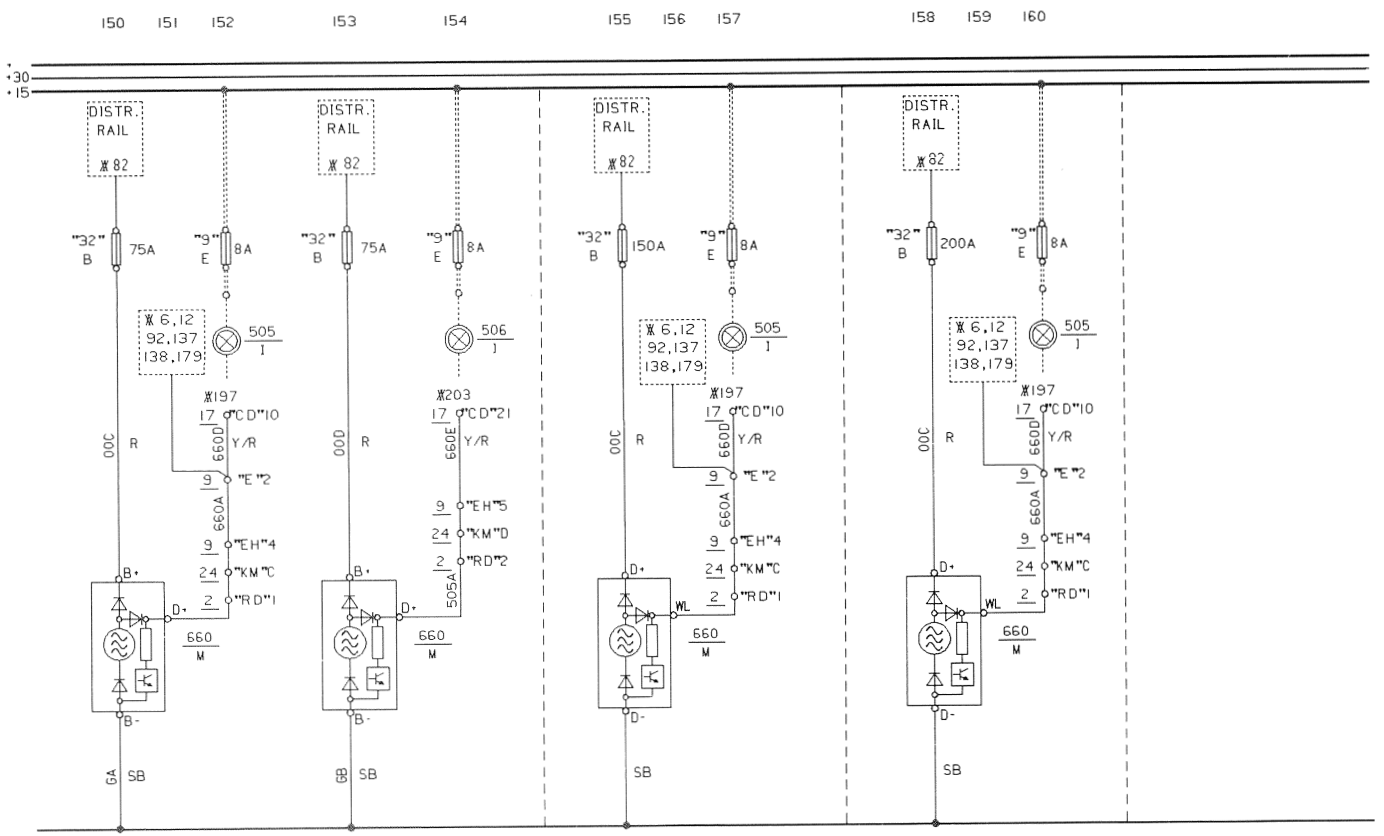

Bosch 2 x 55A CAV 115A CAV 180A

Electrical centre, connectors

EA	GA	EB	ED	EE
EF	AT	EH	EJ	EK

CK	EL	EM	EN	EO
RET	STE	ER	EI	ET

EP	GBX	KE	KF	KH
EG		TC	KG	

Fuse	Rating	Circuit protected by fuse
"9"	8A	Alternator charging warning lamp(s)
"32"	75A	Alternator polarity protection, Bosch 2 x 55A
"32"	150A	Alternator polarity protection, CAV 115A
"32"	200A	Alternator polarity protection, CAV 180A

No.	Component
505	Alternator 1 charging warning lamp
506	Alternator 2 charging warning lamp
660	Alternator(s)

Circuit description

The bus charging system may be equipped with either one or two alternators (660). Where two alternators are fitted these are connected in parallel and each alternator has its own polarity protection fuse "32" and charging warning lamp (505) and (506). The secondary charging warning lamp (506) is connected via connector CD21.

When the alternator is at rest and during starting, the charging warning lamp is lit, as it is grounded via the D+ (or WL in CAV alternators) alternator connection.

When the bus engine starts, the alternator begins to generate current, which flows from the B+ (or D+ in CAV alternators) alternator connection to the batteries via the polarity protection fuse "32". The generated voltage also appears at the D+ (or WL) connection to equalize the +15 voltage at the other side of the charging warning lamp. The lamp thus goes out, to confirm that the alternator is charging.

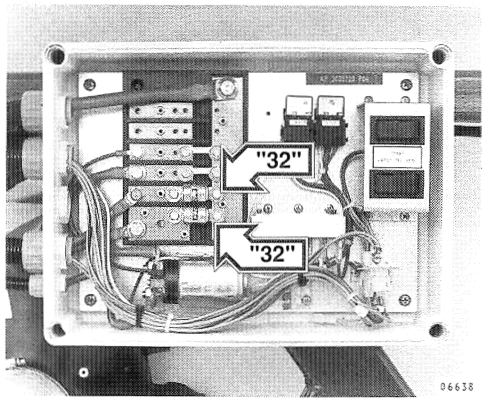

Alternator polarity protection fuses in rear electrical centre

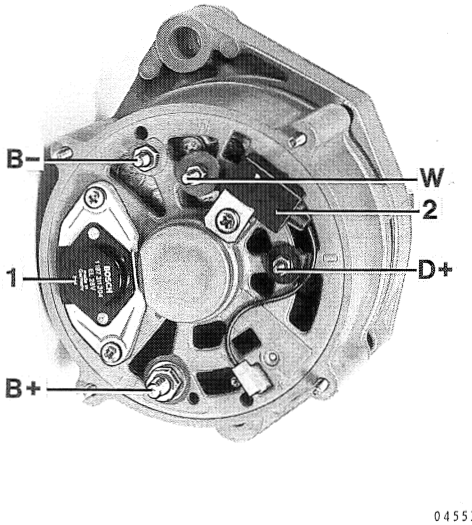

660 Bosch alternator connections

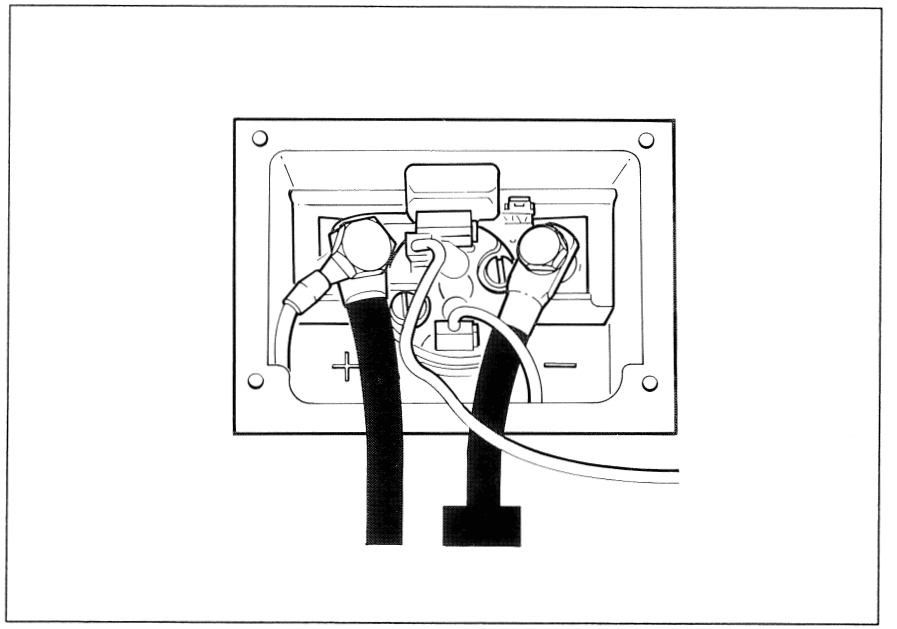

660 CAV alternator connections

10 Central warning lamps and buzzer, instrument panel lighting (Sheet 1 of 2)

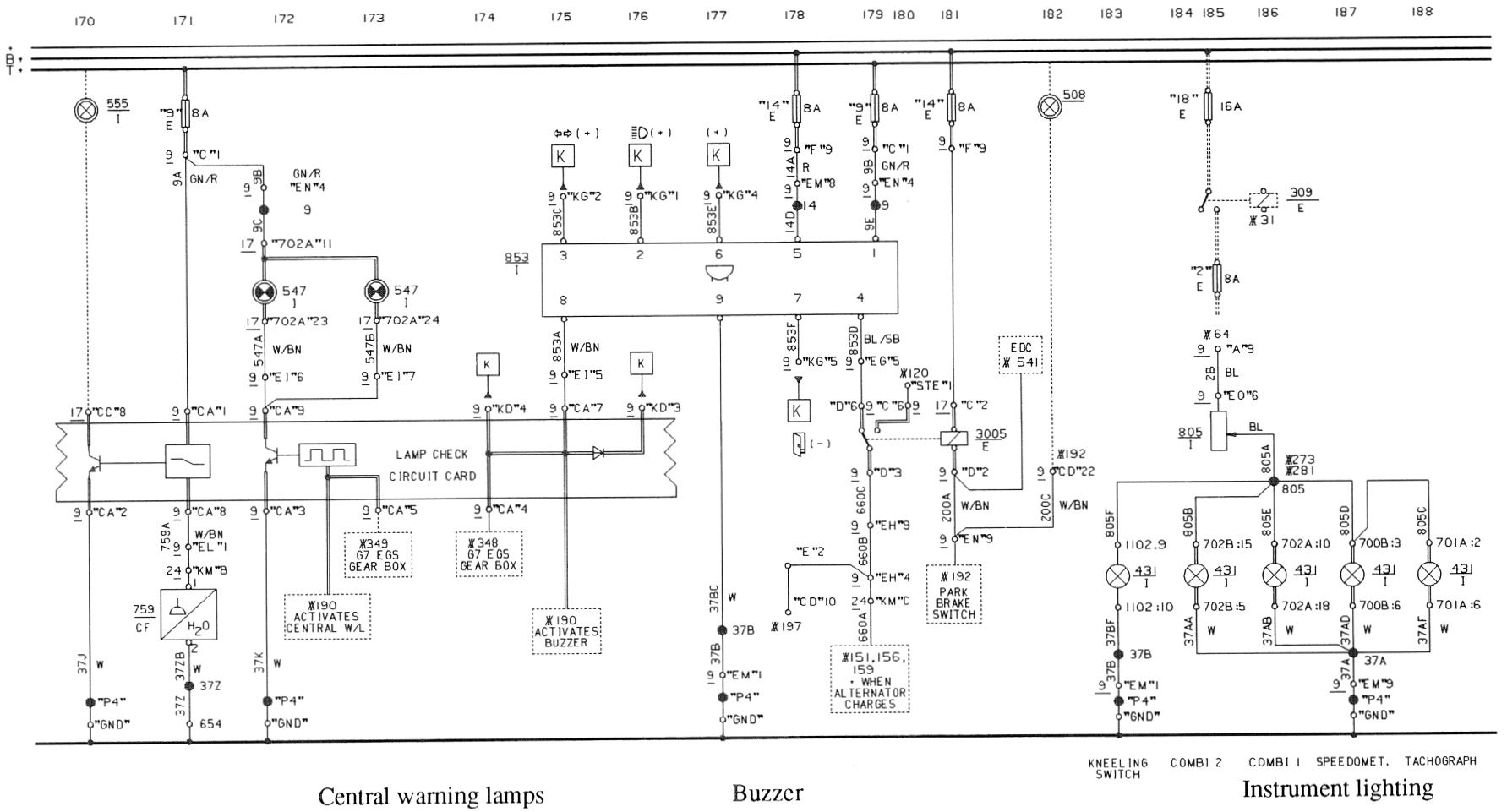

Central warning lamps

Buzzer

Instrument lighting

Electrical centre, connectors

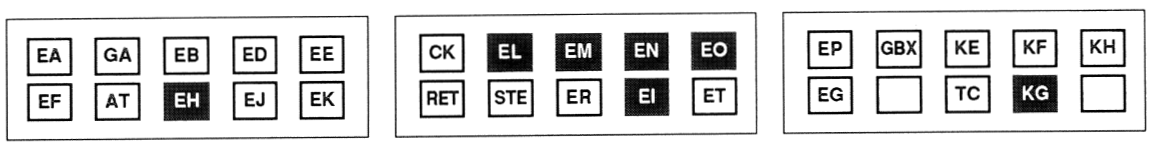

Fuse	Rating	Circuit protected by fuse
"2"	8A	Panel lamps
"9"	8A	Central warning lamps; coolant level warning
"14"	8A	Buzzer, parking brake warning
"18"	16A	Panel lamps (instrument lighting)

No.	Component
309	Parking lights relay
431	Instrument panel lamps
508	Parking brake off warning lamp
547	Central warning lamps
555	Engine coolant level low warning lamp
759	Coolant level sender
805	Panel lamps rheostat (dimmer)
853	Buzzer
3005	Parking brake off warning relay

Circuit descriptions

Central warning lamps and buzzer

When a sensor sends a warning signal to the lamps circuit it passes via a diode matrix (see Schematic 11) which ensures that the instrument panel central warning lamps (547) light. These flash at a fixed frequency, regardless of the supply voltage, i.e. the frequency does not alter during engine starting. The signal similarly starts the warning buzzer (853) for those circuits which use the buzzer as a warning.

The lamp flashing circuit is based on an astable multivibrator built into an integrated circuit. When an alarm is activated, the signal pulls down the base voltage of transistor T2 to ground. This starts the multivibrator switching at a steady frequency, determined by the values of R9, R10 and C7. The multivibrator controls transistor T3 which switches the warning lamps on and off.

Coolant level warning

This function is also based on an integrated circuit, which sends an alternating current signal to the coolant level sensor (759). The signal amplitude is continuously monitored by the integrated circuit, and if its amplitude reaches a certain level the circuit activates the coolant level warning lamp (555).

(Continued on page 37)

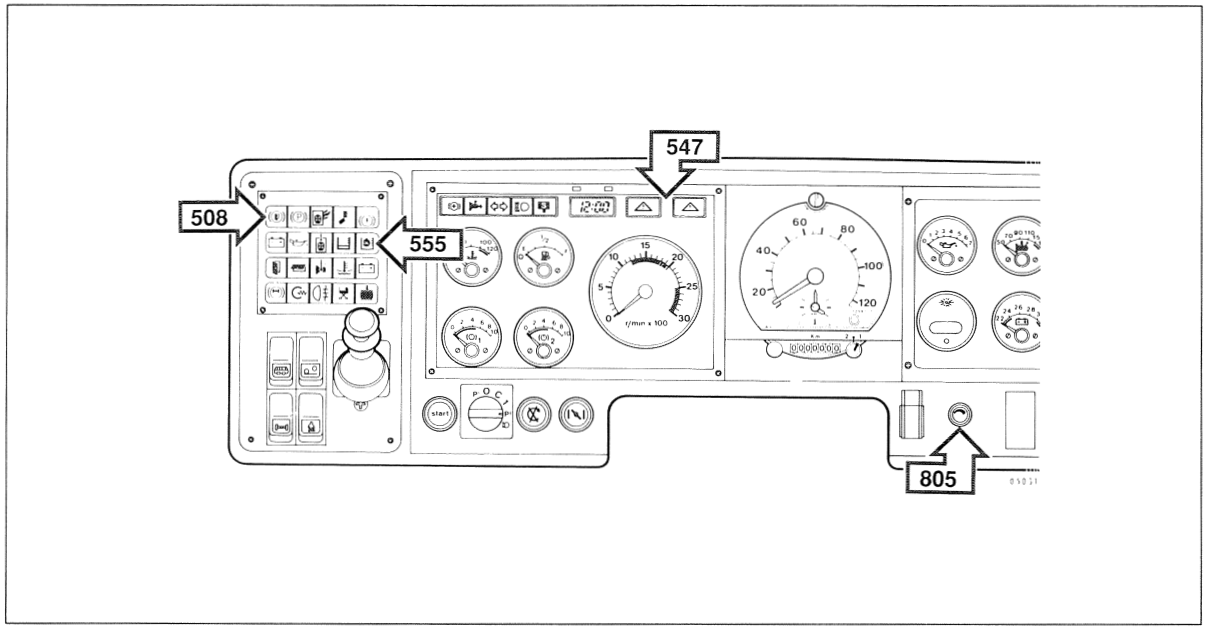

508, 547, 555 Warning lamps
805 Panel lamps rheostat

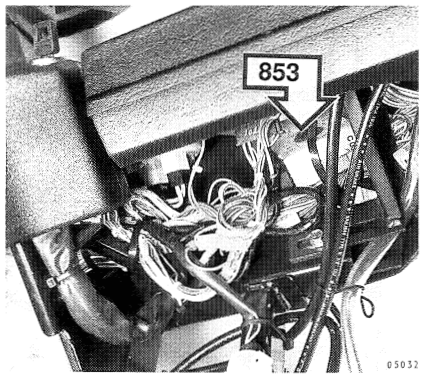

853 Buzzer

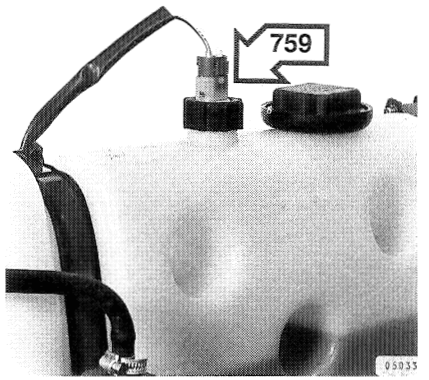

759 Coolant level sender

10 Central warning lamps and buzzer, instrument panel lighting (Sheet 2 of 2)

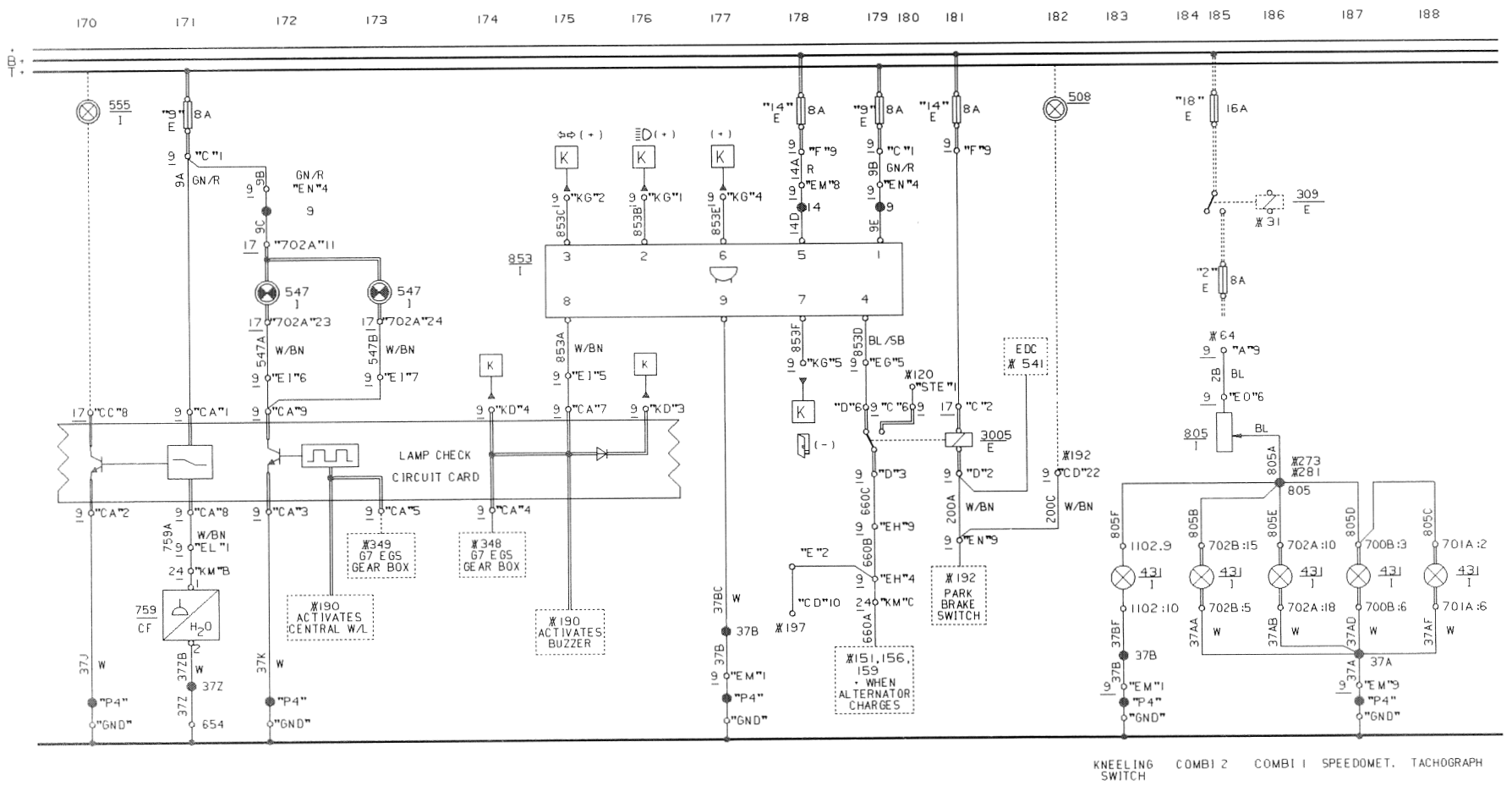

Central warning lamps

Buzzer

Instrument lighting

Electrical centre, connectors

EA	GA	EB	ED	EE
EF	AT	EH	EJ	EK

CK	EL	EM	EN	EO
RET	STE	ER	EI	ET

EP	GBX	KE	KF	KH
EG		TC	KG	

(Continued from page 35)

Parking brake warning (Volvo G7 EGS transmission)
Relay (3005) is connected into the Volvo G7 EGS system. If the engine is stopped without setting the parking brake on, the buzzer will sound. Relay (3005) contact is connected to buzzer (853) terminal 4 in current path 179, which is normally at alternator voltage but will be grounded if the engine stops. Setting the parking brake will close the contact (200) in current path 192 and energize relay (3005), thus opening the line to terminal 4 of the buzzer (853). Hence the buzzer will not normally sound, but if the engine stops and terminal 4 is grounded because relay (3005) has not been energized via the parking brake pressure contact, the buzzer will sound.

Instrument panel lighting
These five lamps (431) are supplied from fuse "18" via the parking lights relay (309) contact and a dimming rheostat (805).

Changing instrument panel light bulbs
To change a panel lamp (431), unscrew the panel bezel, unplug and remove the appropriate instrument, open the casing at the rear and change the bulb.

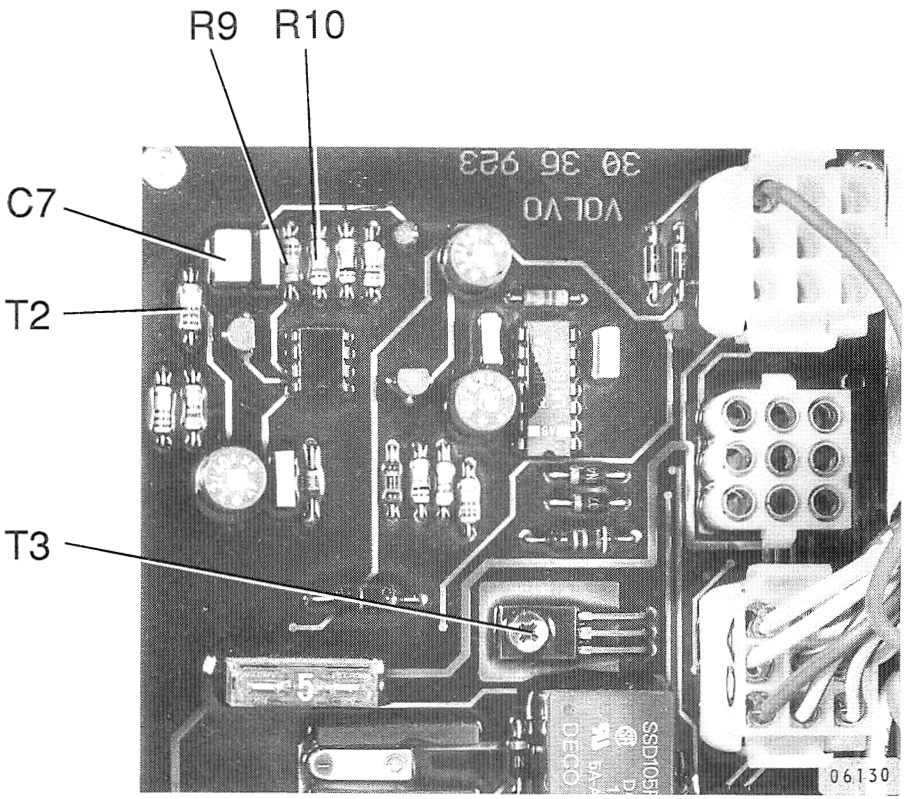

Lamp flasher circuit in electrical centre

11 Indication and warning lamps (Sheet 1 of 2)

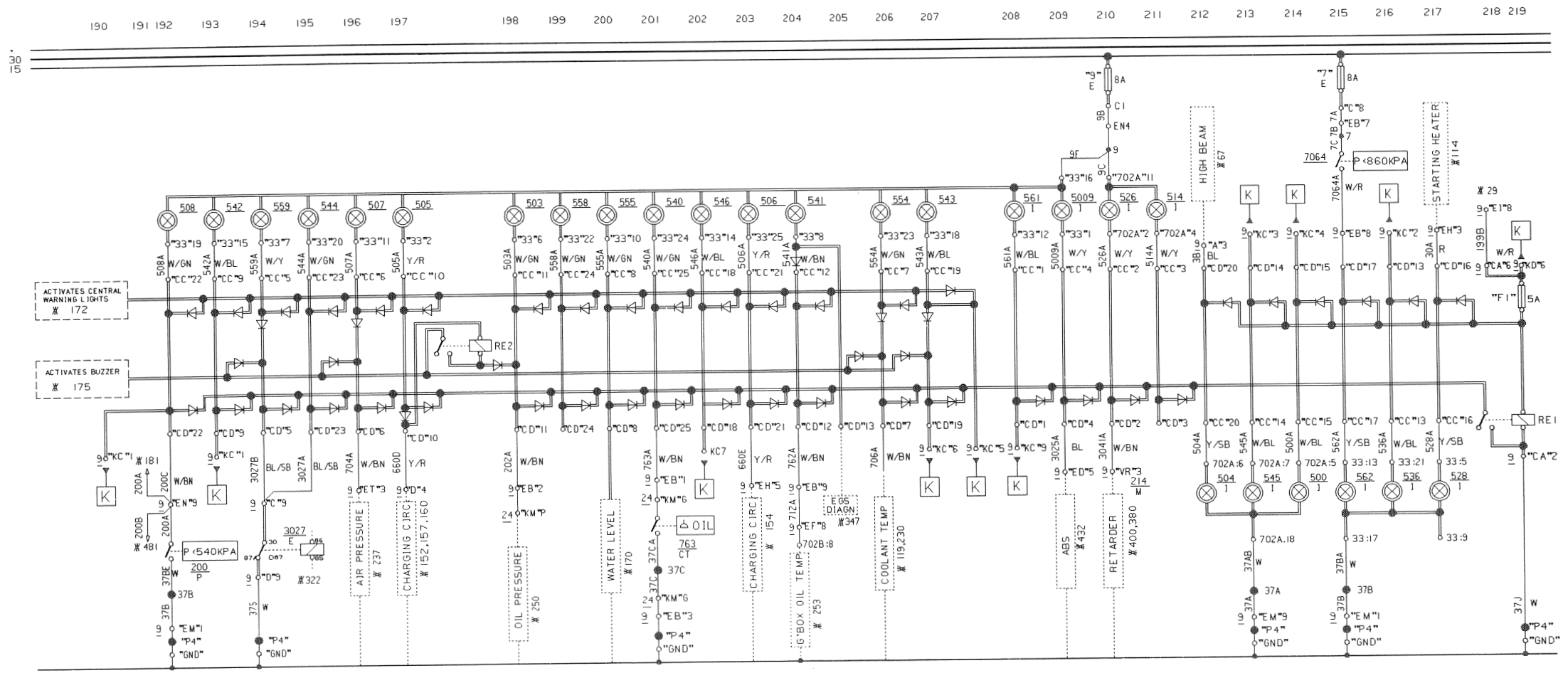

Indication and warning lamps

Electrical centre, connectors

EA	GA	EB	ED	EE
EF	AT	EH	EJ	EK

CK	EL	EM	EN	EO
RET	STE	ER	EI	ET

EP	GBX	KE	KF	KH
EG		TC	KG	

Fuse	Rating	Circuit protected by fuse
"7"	8A	Indicator lamp group
"9"	8A	Warning panel lamps
F1	5A	Lamp check circuit

No.	Component
200	Parking brake pressure switch
500	Indicator lamp, direction indicators
503	Warning lamp, engine oil pressure low
504	Indicator lamp, high beam
505	Charging warning lamp, alternator 1
506	Charging warning lamp, alternator 2
507	Warning lamp, service brakes pressure low
508	Warning lamp, parking brake off
526	Indicator lamp, retarder
528	Indicator lamp, starting heater
536	Indicator lamp, rear fog lights
540	Warning lamp, engine oil level low
541	Warning lamp, transm. temp. high/EGS diagn. and safety system
542	Warning lamp, door brake
543	Warning lamp, engine compt./luggage doors open
544	Warning lamp, engine compartment temp.high
545	Indicator lamp, next stop
546	Warning lamp, doors open
554	Warning lamp, engine coolant temperature high
555	Warning lamp, engine coolant level low
559	Warning lamp, engine compartment fire
561	Warning lamp, perambulator
562	Warning lamp, air suspension pressure low
763	Engine oil level low contact
3027	Fire warning lamp and buzzer relay
5009	Indicator lamp, ABS
7064	Air suspension pressure low contact
RE1	Lamp check relay
RE2	Oil pressure low buzzer activating relay

Circuit description

Every sensor in the chassis is connected to its indicator or warning lamp via a connection in CD. The signals pass through a diode matrix which determines whether the central warning lamps and/or buzzer should be activated.

(Continued on page 41)

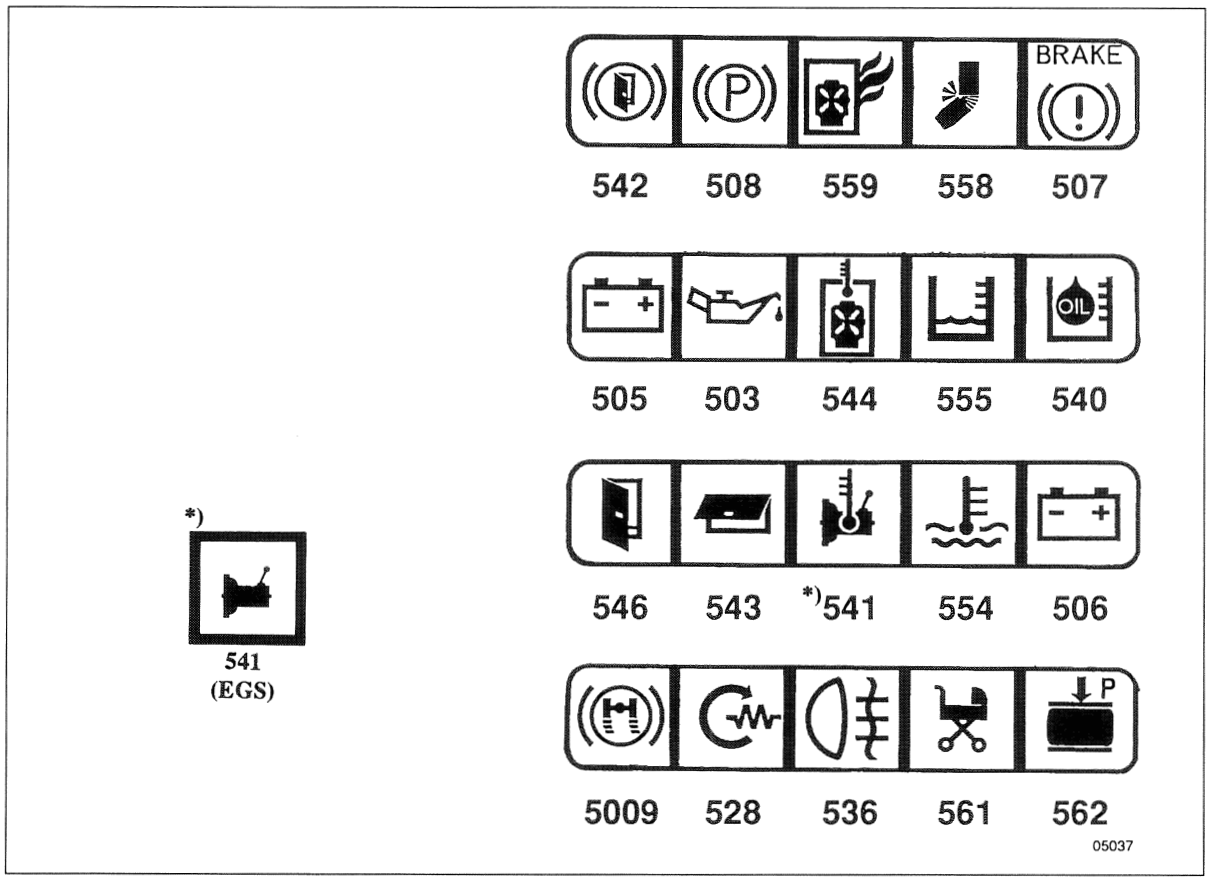

Warning and indicator lamps panel

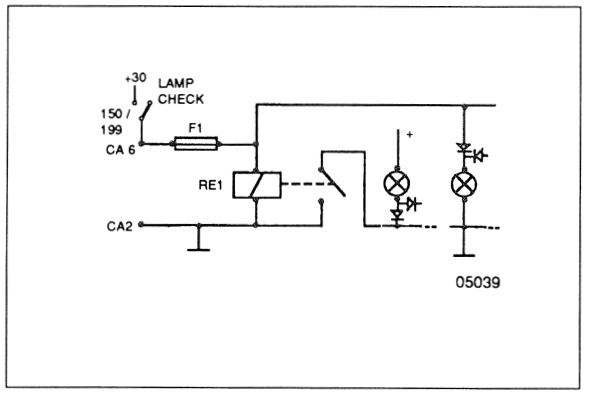

Lamp check system

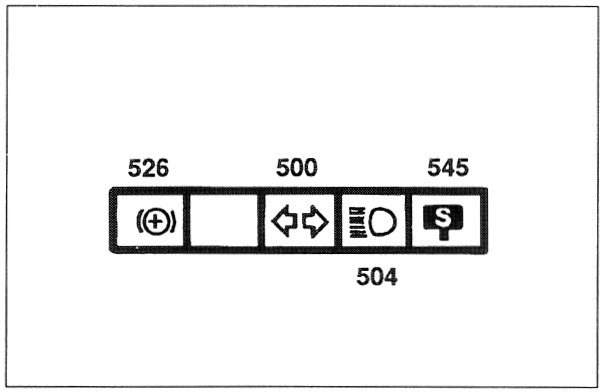

Indicator lamp group

11 Indication and warning lamps (Sheet 2 of 2)

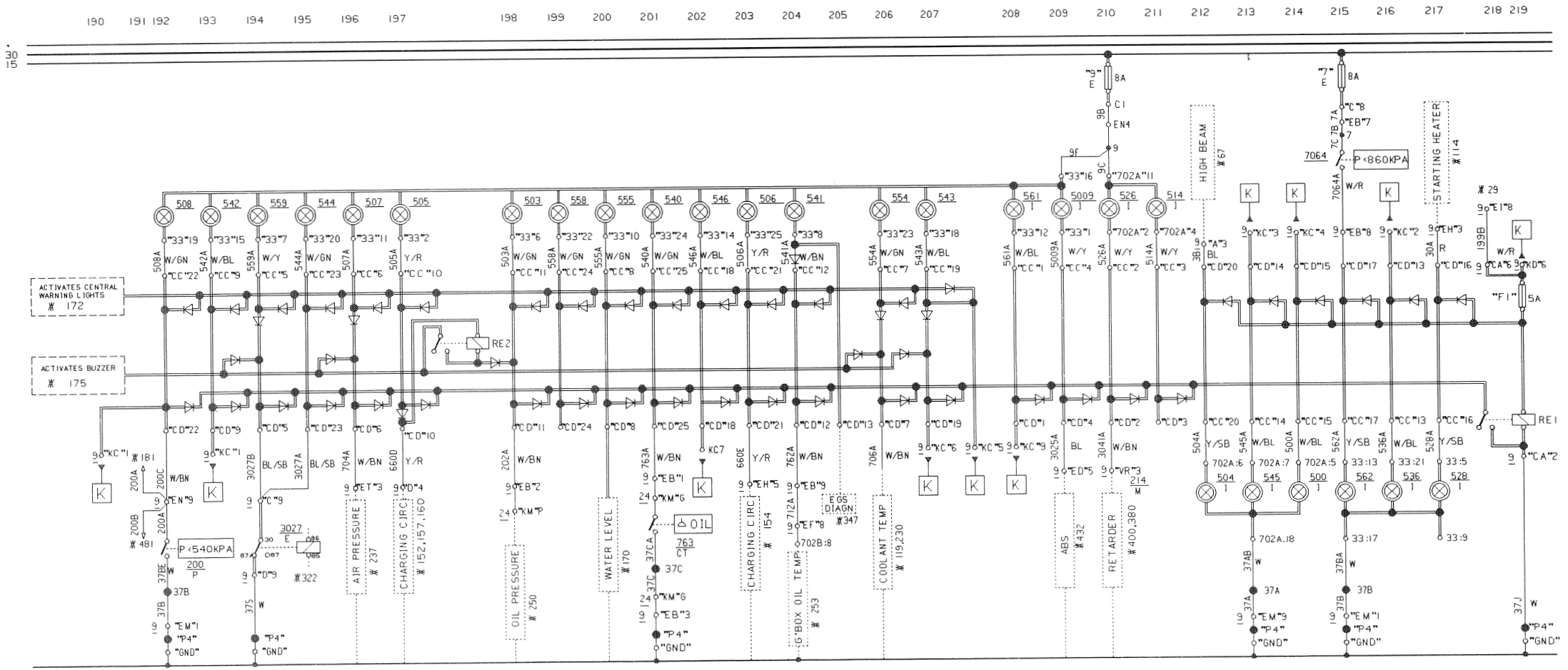

Indication and warning lamps

Electrical centre, connectors

EA	GA	EB	ED	EE
EF	AT	EH	EJ	EK

CK	EL	EM	EN	EO
RET	STE	ER	EI	ET

EP	GBX	KE	KF	KH
EG		TC	KG	

(Continued from page 39)

When either the keystart switch (150) (in current path 60) or the feed switch (199) (in current path 29) is turned to the lamp check position, all the indicator and warning lamps should light. Those which light from a voltage input receive it from the switch, via CA6 and the diode matrix, and those which light from ground are grounded (via the diode matrix and CA2) by RE1, which is energized from the switch lamp check position.

Warning lamp 541 circuit in current path 204 includes a diode (between "33" 8 and "CC" 12) which ensures that when this lamp is used for the EGS system, output "K1" 32 on the EGS control unit (current path 347) is only loaded by the lamp.

If the engine oil pressure falls low enough to light warning lamp (503) in current path 198, relay (RE2) will also be energised (if the engine is running) and cause the buzzer to sound.

Warning lamps lit by grounding
503, 505, 506, 507, 508, 514, 526, 540, 542, 543, 544, 546, 548, 554, 555, 558, 559, 561, 5009

Warning lamps lit by positive voltage
500, 504, 528, 536, 545, 562

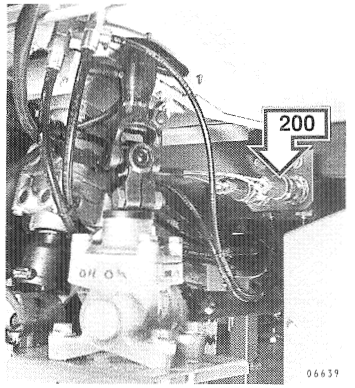

200 Parking brake pressure switch

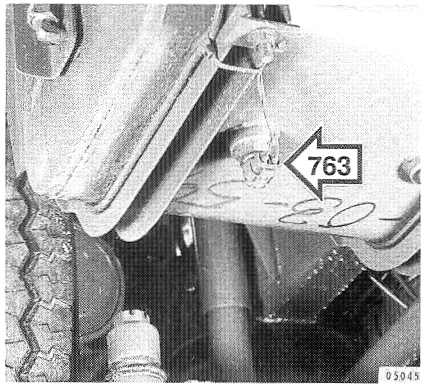

763 Engine oil level low contact

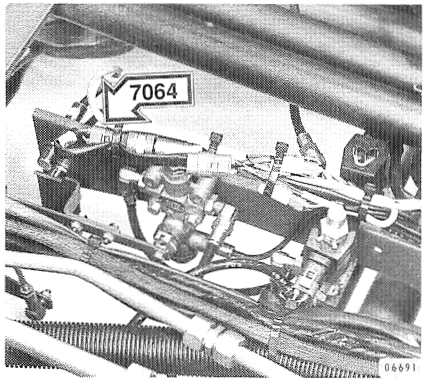

7064 Air suspension pressure low contact (B10B)

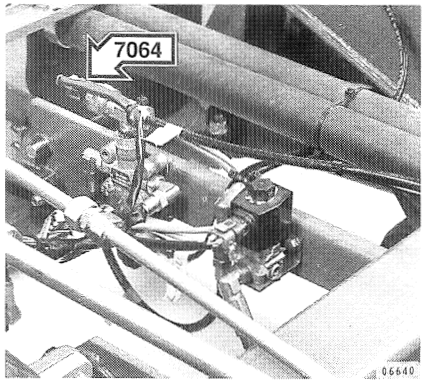

7064 Air suspension pressure low contact (B12)

12 Instrument gauges (combi 1) (Sheet 1 of 2)

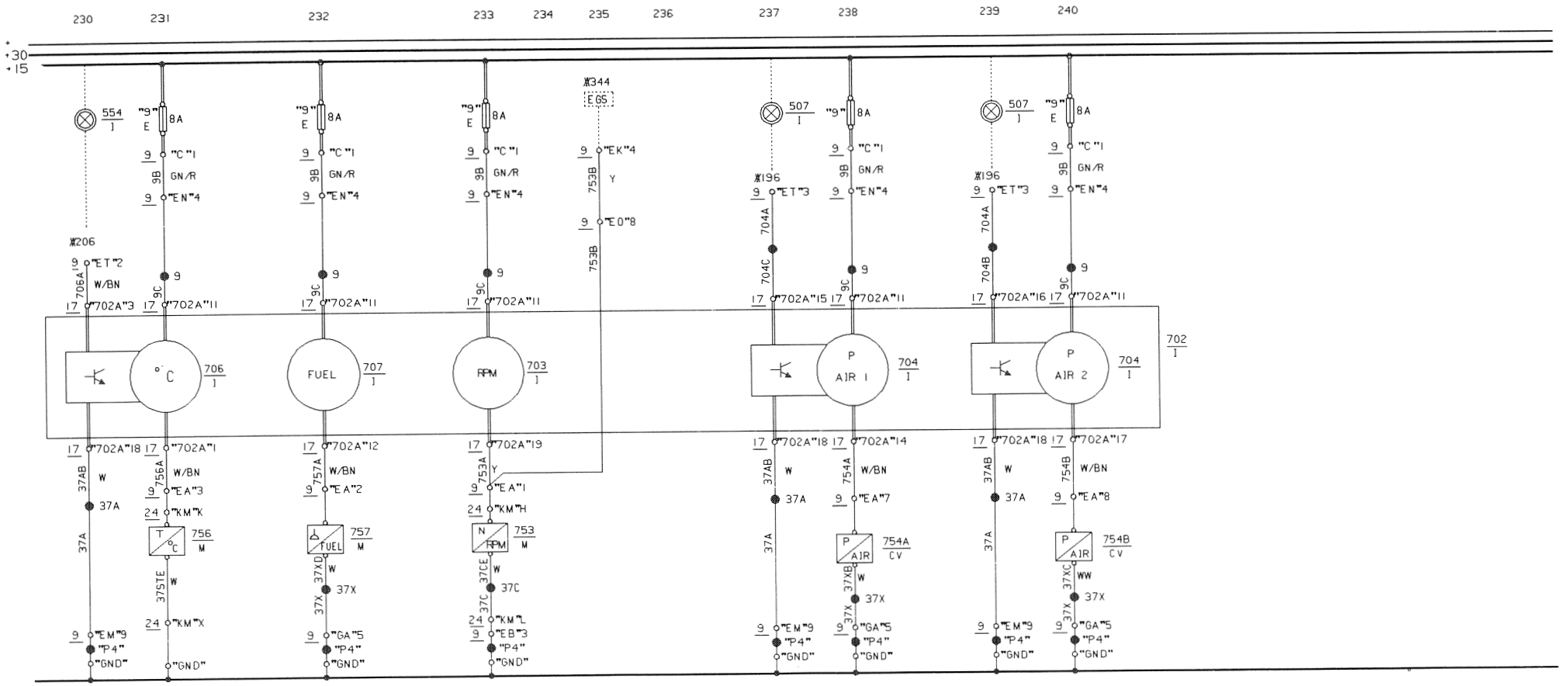

Combi 1

Electrical centre, connectors

EA	GA	EB	ED	EE
EF	AT	EH	EJ	EK

CK	EL	EM	EN	EO
RET	STE	ER	EI	ET

EP	GBX	KE	KF	KH
EG		TC	KG	

Fuse	Rating	Circuit protected by fuse
"9"	8A	Instrument gauges

No.	Component
507	Warning lamps, service brakes (1) and (2) air pressure low
554	Warning lamp, engine coolant temperature high
702	Combi 1 instruments
703	Gauge, engine rpm
704	Gauges, service brakes air pressure (1 and 2)
706	Gauge, engine coolant temperature
707	Gauge, fuel
753	Sender, engine speed
754A	Sender, front wheel brake circuit air pressure (1)
754B	Sender, rear wheel brake circuit air pressure (2)
756	Sender, engine coolant temperature
757	Sender, fuel level

Circuit descriptions

Gauges and warning lamps

The electronic gauges (704) and (706) have built-in electronic switches controlling their warning lamps. If the sender signal exceeds a preset limit, the electronic switch will operate and ground the lamp negative line, so that the lamp will light. The gauge indication is controlled by a separate circuit.

Engine speed signal from sender (753)

The engine speed sender (753) signal goes to the engine rpm gauge (703) and also, where applicable, to the EGS control unit (9059).

(Continued on page 45)

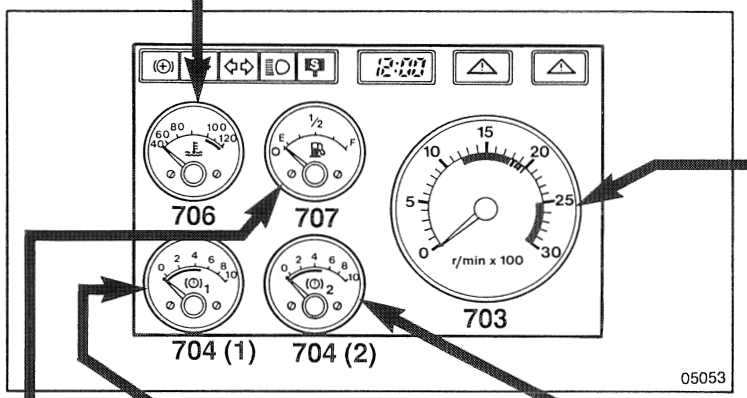

702 Combi 1 instruments

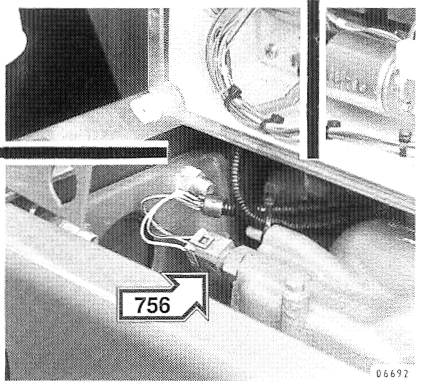

756 Engine coolant temperature sender

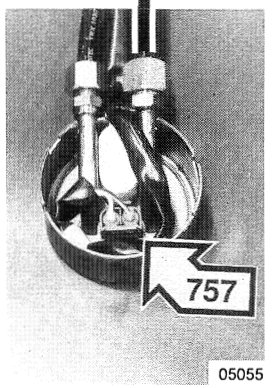

757 Fuel level sender

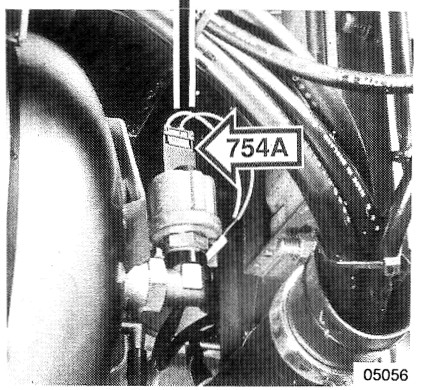

754A Front brake circuit air pressure sender

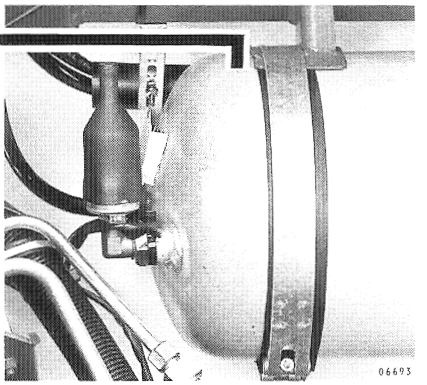

754B Rear brake circuit air pressure sender

B10B COMBI 1 GAUGE CONNECTIONS

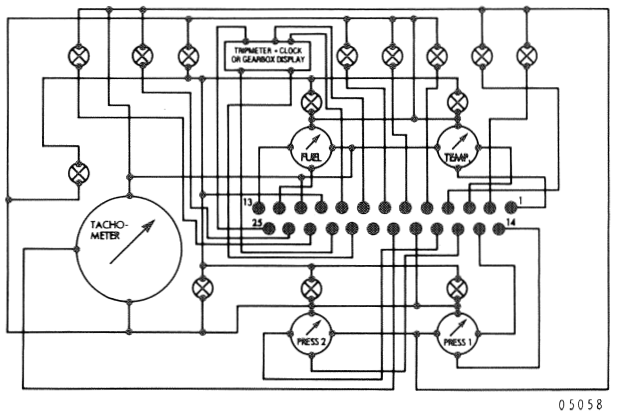

Combi 1 wiring diagram

Combi 1	Plug connections
1	Sensor water temperature
2	Retarder
3	Warning contact water temperature
4	Split (–)
5	Direction indicators (+)
6	High beam (+)
7	Next stop (+)
8	+30 terminal
9	Tripmeter signal or display switch
10	Instrument illumination (+)
11	+15 terminal
12	Sensor fuel gauge
13	Warning contact (upper left)
14	Sensor air pressure 1
15	Warning contact air pressure 1
16	Warning contact air pressure 2
17	Sensor air pressure 2
18	31 terminal (–)
19	Sensor inductive
21	Tripmeter switch or display data
22	Display clock
23	Warning control light red (+)
24	Warning control light (–)
25	Battery minus (31)

12 Instrument gauges (combi 1) (Sheet 2 of 2)

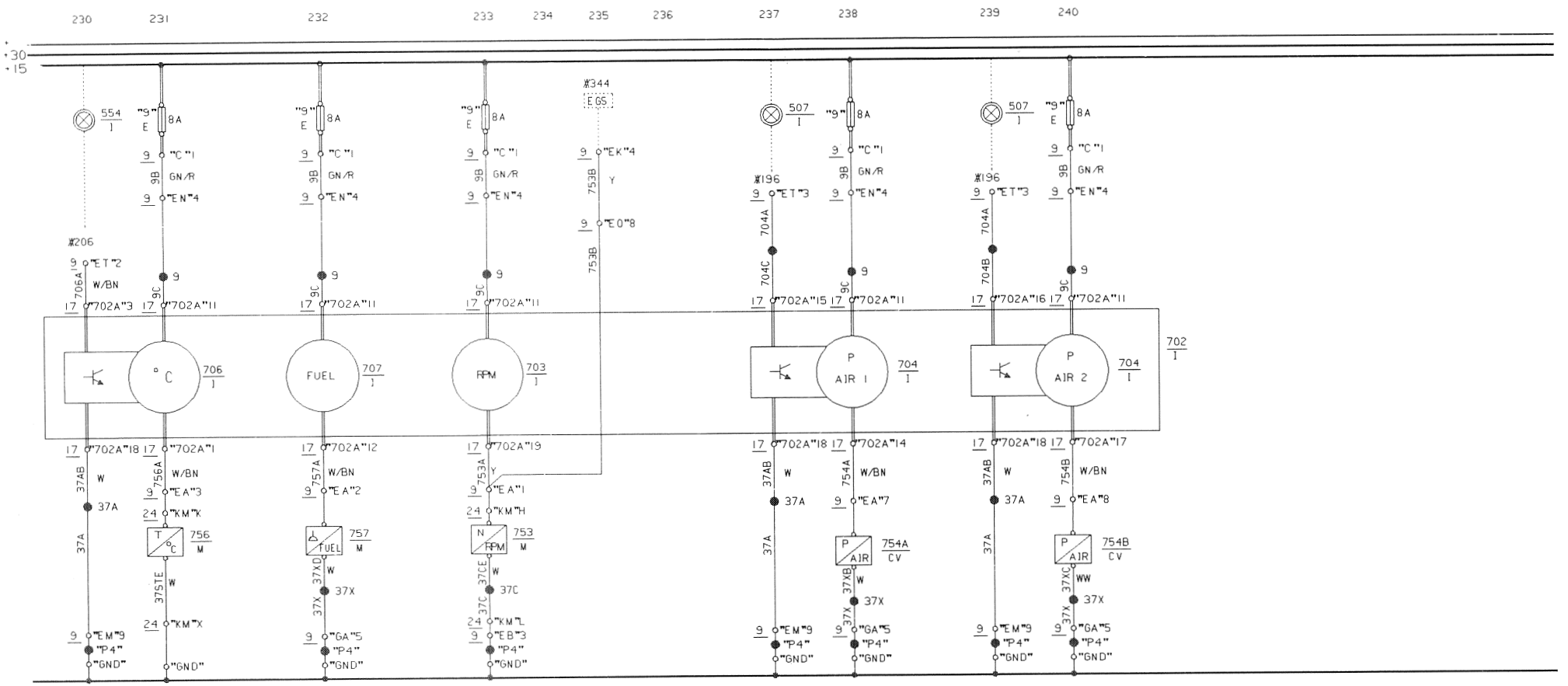

Combi 1

Electrical centre, connectors

EA	GA	EB	ED	EE
EF	AT	EH	EJ	EK

CK	EL	EM	EN	EO
RET	STE	ER	EI	ET

EP	GBX	KE	KF	KH
EG		TC	KG	

(Continued from page 43)

Sender characteristics
The fuel tank sender (757) has approximate resistance values as listed in the table below. If the circuit fails, the gauge will indicate either full tank (open circuit) or empty tank (grounded circuit).

The coolant temperature sender (756) has the following approximate resistance values:at 60°C 117 ± 14Ω; at 90°C 46 ± 4Ω; at 100°C 35 ± 3Ω. At 102°C ± 3°C the transistorized circuit in the gauge lights the warning lamp (554).

The service brakes air pressure gauges indicate pressure in (1) the front brake tank and (2) the rear brake tank. The warning lamps for these are lit at between 0.46 and 0.5 MPa.

NOTE: An electrical open circuit will cause the affected pressure gauge(s) to read maximum.

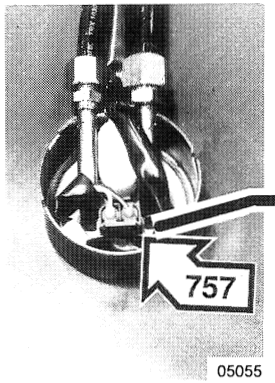

757 Fuel level sender

Fuel gauge reading	B12 Fuel sender 3036511 resistance (Ω)	B10B Fuel sender 1197768 resistance (Ω)
Max	10	10
3/4	53	40
1/2	96.5	89.5
1/4	139	139
Empty	180	180

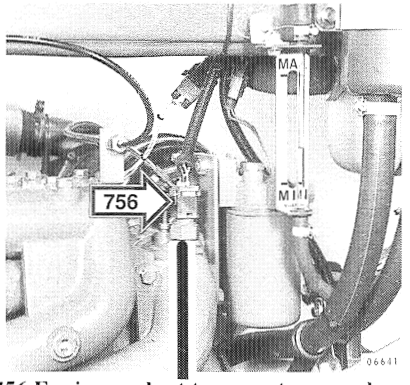

756 Engine coolant temperature sender

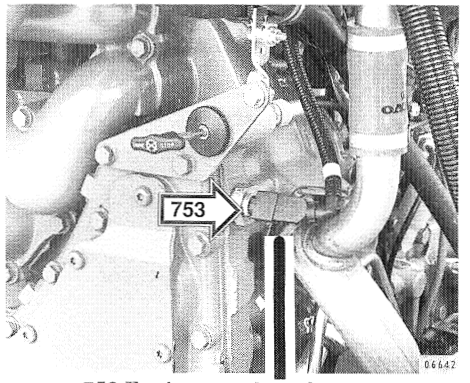

753 Engine speed sender

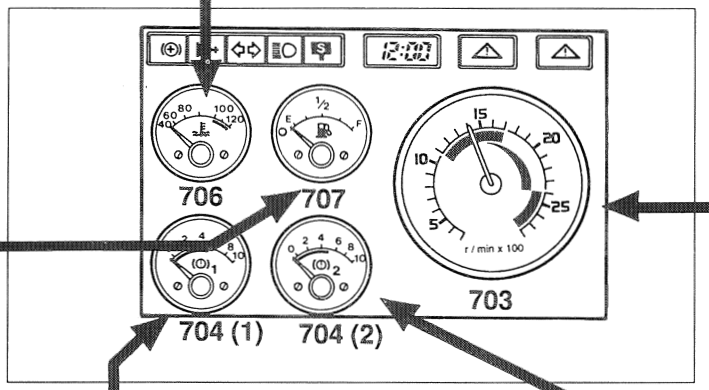

702 Combi 1 instruments

B12 COMBI 1 GAUGE CONNECTIONS

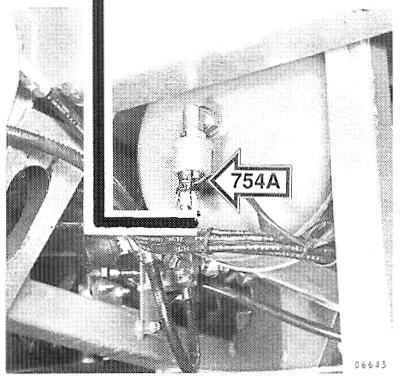

754A Front brake circuit air pressure sender

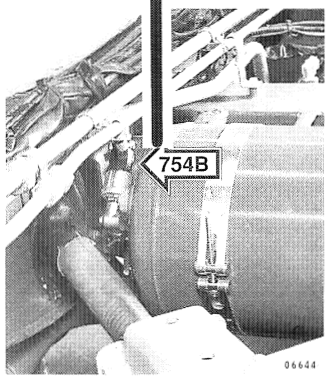

754B Rear brake circuit air pressure sender

13 Instrument gauges (combi 2) (Sheet 1 of 2)

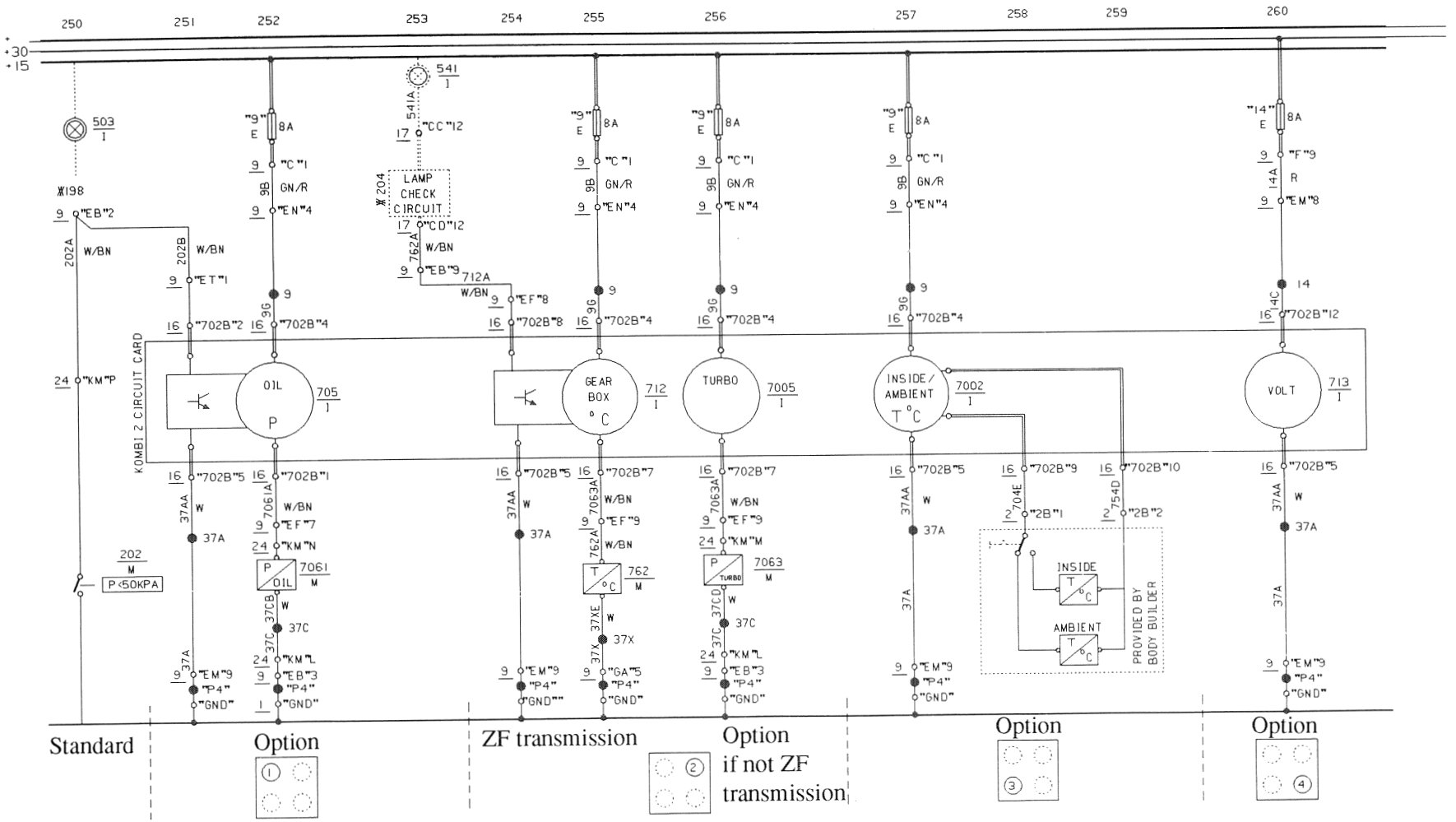

Electrical centre, connectors

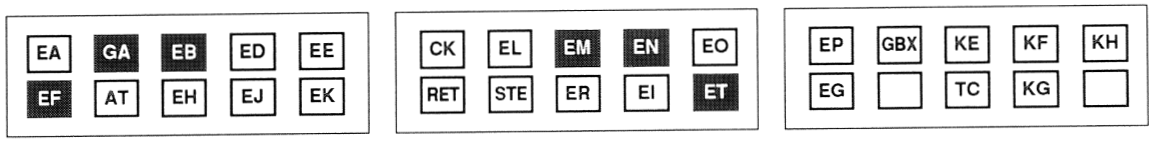

Fuse	Rating	Circuit protected by fuse
"9"	8A	Instrument gauges
"14"	8A	Voltmeter

No.	Component
202	Engine oil pressure low contact
503	Warning lamp, engine oil pressure low
541	Warning lamp, transmission temperature or EGS diagnostics
705	Gauge, engine oil pressure
712	Gauge, ZF transmission temperature
713	Voltmeter
762	Transmission oil temp. sender or high transmission oil temp. contact
7002	Gauge, interior and ambient temperature
7005	Gauge, turbocharger pressure
7061	Engine oil pressure sender
7063	Turbocharger pressure sender

Circuit description

The electronic gauges (704), (705) and (712) have built-in electronic switches controlling their warning lamps. If the sender signal exceeds a preset limit, the electronic switch will operate and ground the lamp negative line, so that the lamp will light. The gauge indication is controlled by a separate circuit.

In buses equipped with the Volvo G7 EGS transmission, the high transmission temp. warning lamp (541) is used as a transmission diagnostics warning lamp (See Schematic 17).

Buses equipped with ZF automatic transmissions have a transmission temperature gauge (712).

The temperature gauge (7002) indicates interior or ambient temperature according to the setting of its switch. The switch and temperature sensor locations are determined by the body builder.

Buses equipped with a manual gearbox may be fitted with a turbocharger pressure gauge instead of a transmission oil temperature gauge.

Note that buses will be equipped with *either* an oil pressure contact (202) *or* an engine oil pressure sender (7061).

(Continued on page 49)

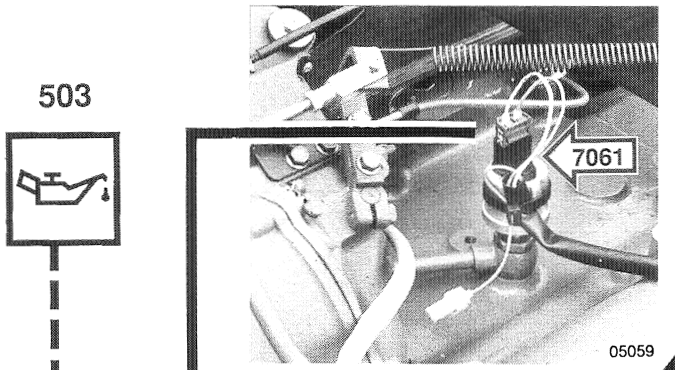

7061 Engine oil pressure sender

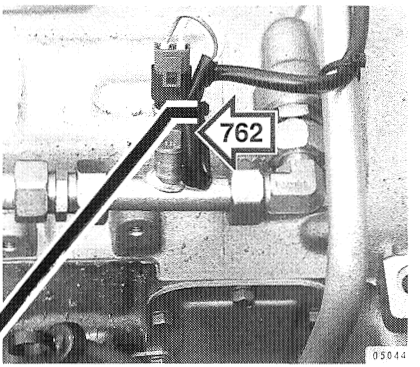

762 Transmission oil temperature sender

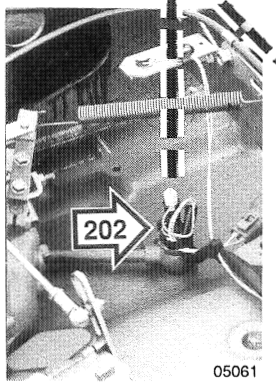

202 Engine oil pressure contact

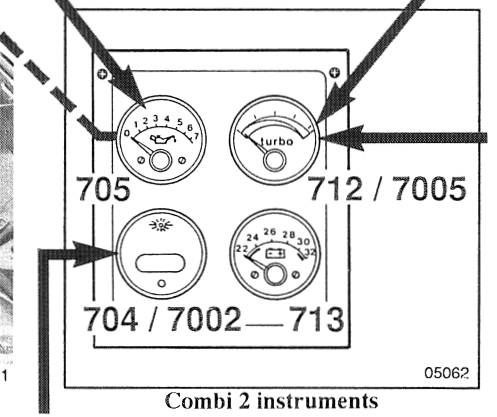

Combi 2 instruments

B10B COMBI 2 GAUGE CONNECTIONS

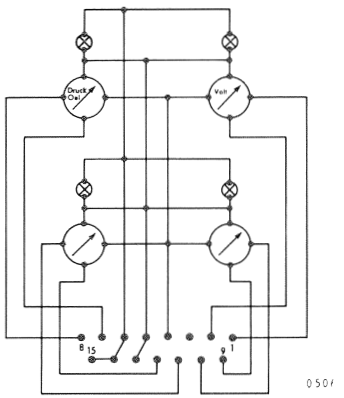

Combi 2 wiring diagram

Combi 2	Plug connections
1	Sensor upper right
2	Warning contact upper right
3	Not connected
4	+15 terminal
5	31 terminal (–)
6	Not connected
7	Sensor oil pressure upper left
8	Warning contact oil pressure upper left
9	Warning contact lower right
10	Sensor lower right
11	Warning contact lower left
12	Sensor lower left
13	Not connected
14	Not connected
15	Instrument illumination (–)

13 Instrument gauges (combi 2) (Sheet 2 of 2)

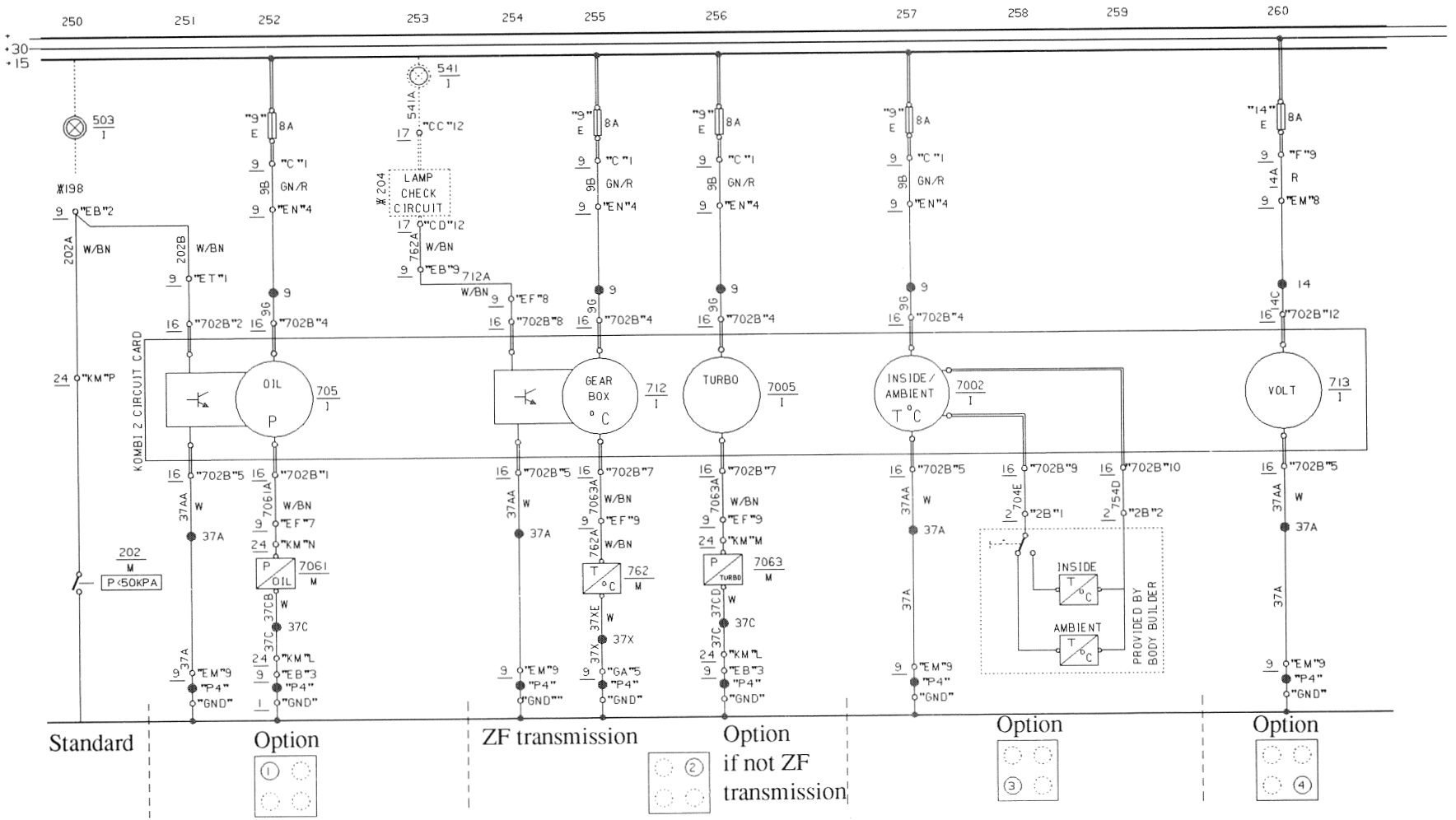

Electrical centre, connectors

EA	GA	EB	ED	EE
EF	AT	EH	EJ	EK

CK	EL	EM	EN	EO
RET	STE	ER	EI	ET

EP	GBX	KE	KF	KH
EG		TC	KG	

(Continued from page 47)

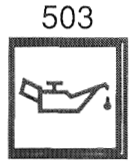

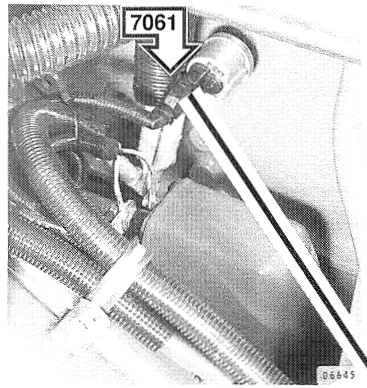

7061 Engine oil pressure sender

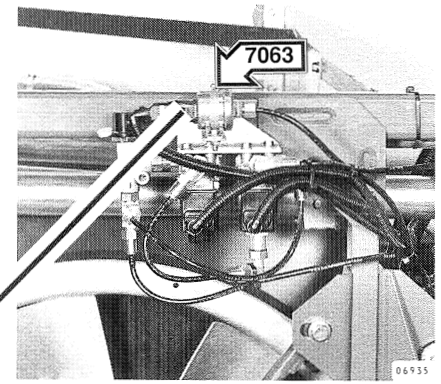

7063 Turbocharger pressure sender

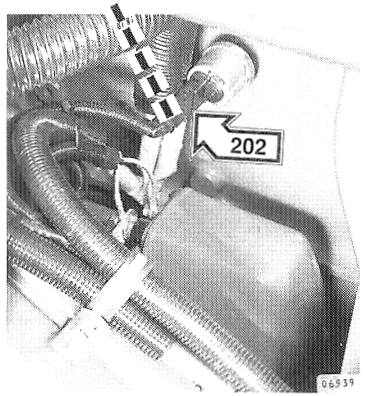

202 Engine oil pressure contact

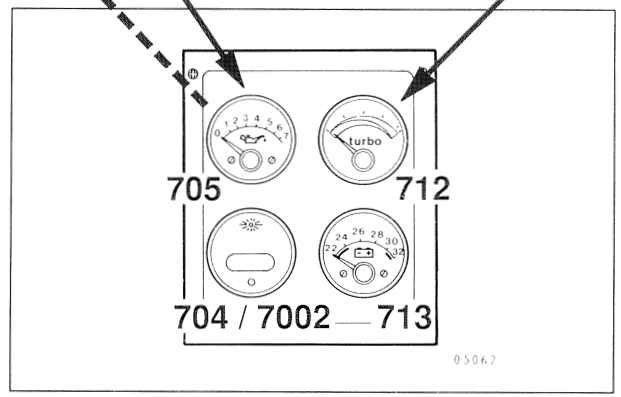

Combi 2 instruments

B12 COMBI 2 GAUGE CONNECTIONS

14 Speedometer, tachograph, clock/odometer

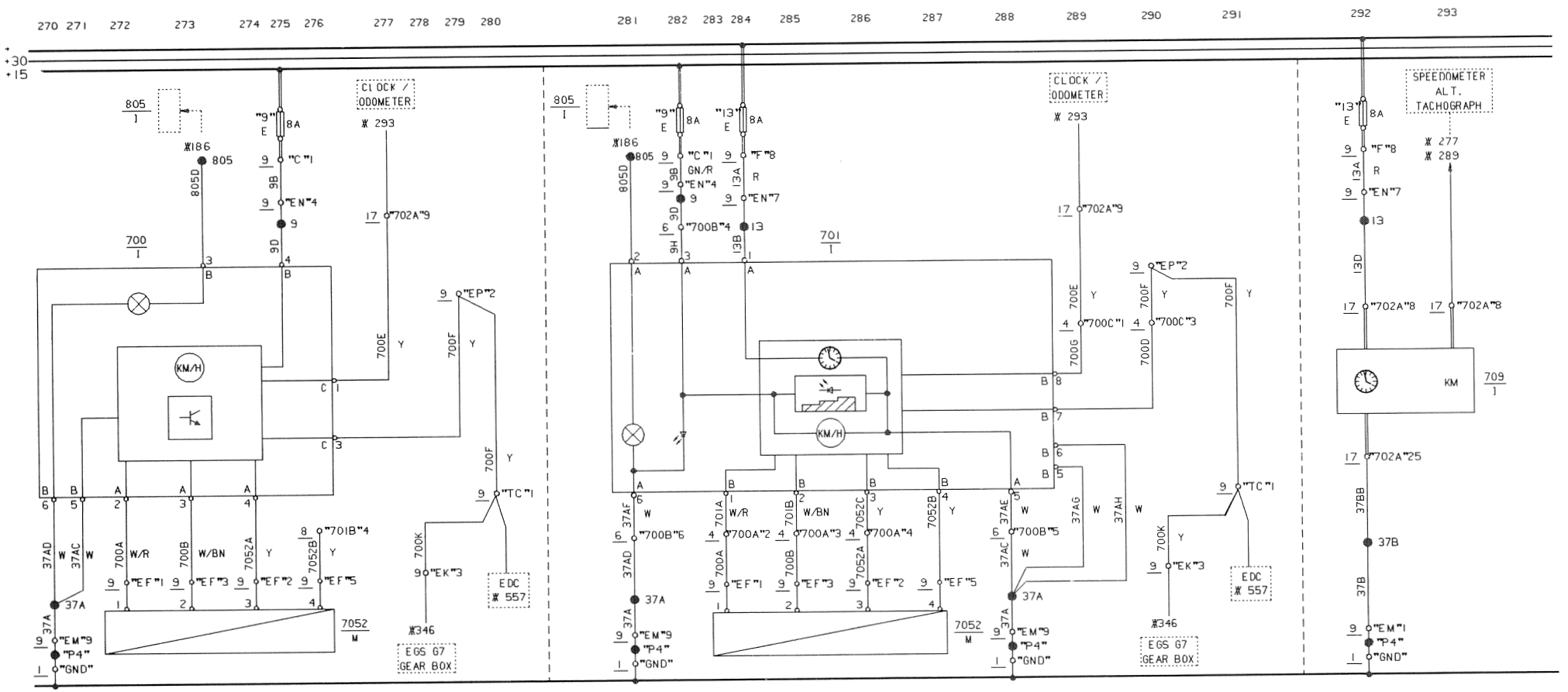

Speedometer

Tachograph

Clock/odometer

Electrical centre, connectors

EA	GA	EB	ED	EE
EF	AT	EH	EJ	EK

CK	EL	EM	EN	EO
RET	STE	ER	EI	ET

EP	GBX	KE	KF	KH
EG		TC	KG	

Fuse	Rating	Circuit protected by fuse
"9"	8A	Speedometer; tachograph
"13"	8A	Clock/odometer

No.	Component
700	Speedometer
701	Tachograph
709	Clock/odometer
805	Panel lamps rheostat (dimmer)
7052	Transmission speed sender

Circuit descriptions

Speedometer and tachograph

The speedometer (700) and tachograph (701) are fully transistorized, and supplied with a speed signal consisting of square wave pulses from the sender (7052), mounted on the transmission.

One version of the sender (7052) includes a Hall element which is influenced by the magnetic field of the rotating core. The output pulse repetition frequency depends on the core rotation speed.

The Volvo G7 EGS transmission sender (7052) instead has an oscillator, which generates an alternating electromagnetic field as the gear teeth pass by its coil. The alternating pulse frequency depends on the gear wheel rotation speed. The pulses pass via a demodulator to an output stage, and these electronic circuits transform the oscillator pulses into a pair of opposite polarity square waves.

The tachograph includes a light-emitting diode (LED) shown in path 260, lit via an internal tachograph switch when the bus speed reaches a preset level, which can be set by an adjustable screw in the tachograph.

Clock and odometer

The combined clock and odometer (709) is also electronic, and the displayed function is selected by the right hand button above the display, which switches alternately between the clock and odometer functions. The left hand button either resets the odometer to zero or sets the clock time, depending on which function has been selected. Further details of the clock setting procedure are given in the Operators Manual.

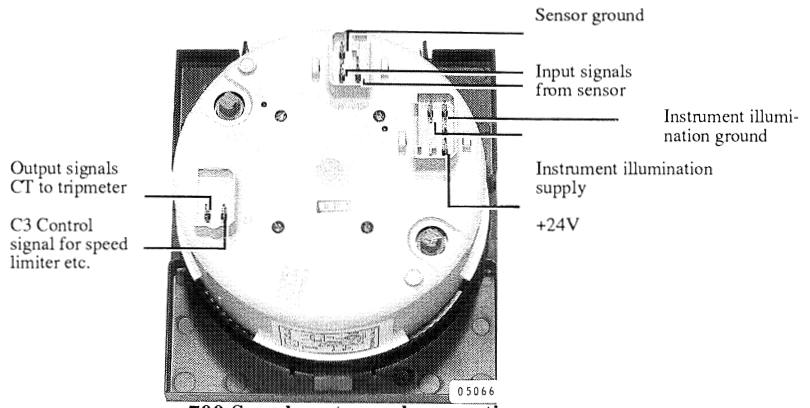

700 Speedometer and connections

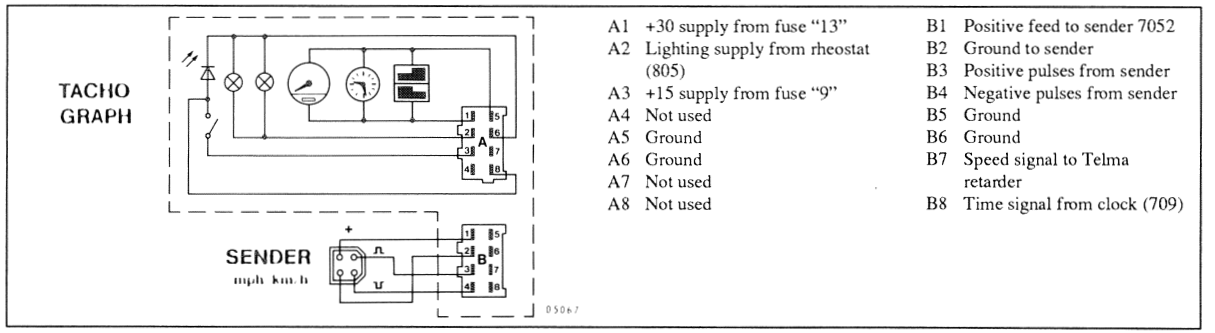

701 Tachograph and connections

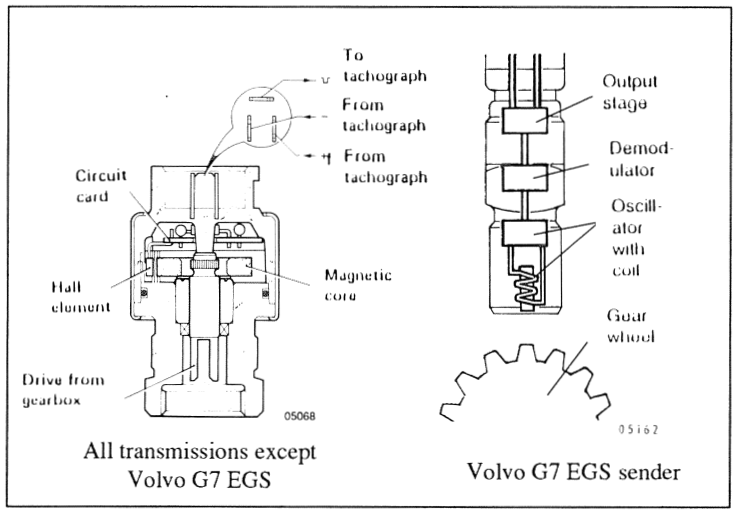

7052 Transmission speed sender variants

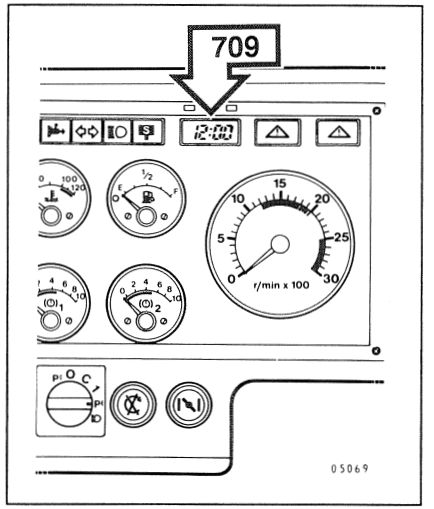

709 Clock/odometer

15 Hazard warning lights, direction indicators, horn, windscreen wash/wipe switches

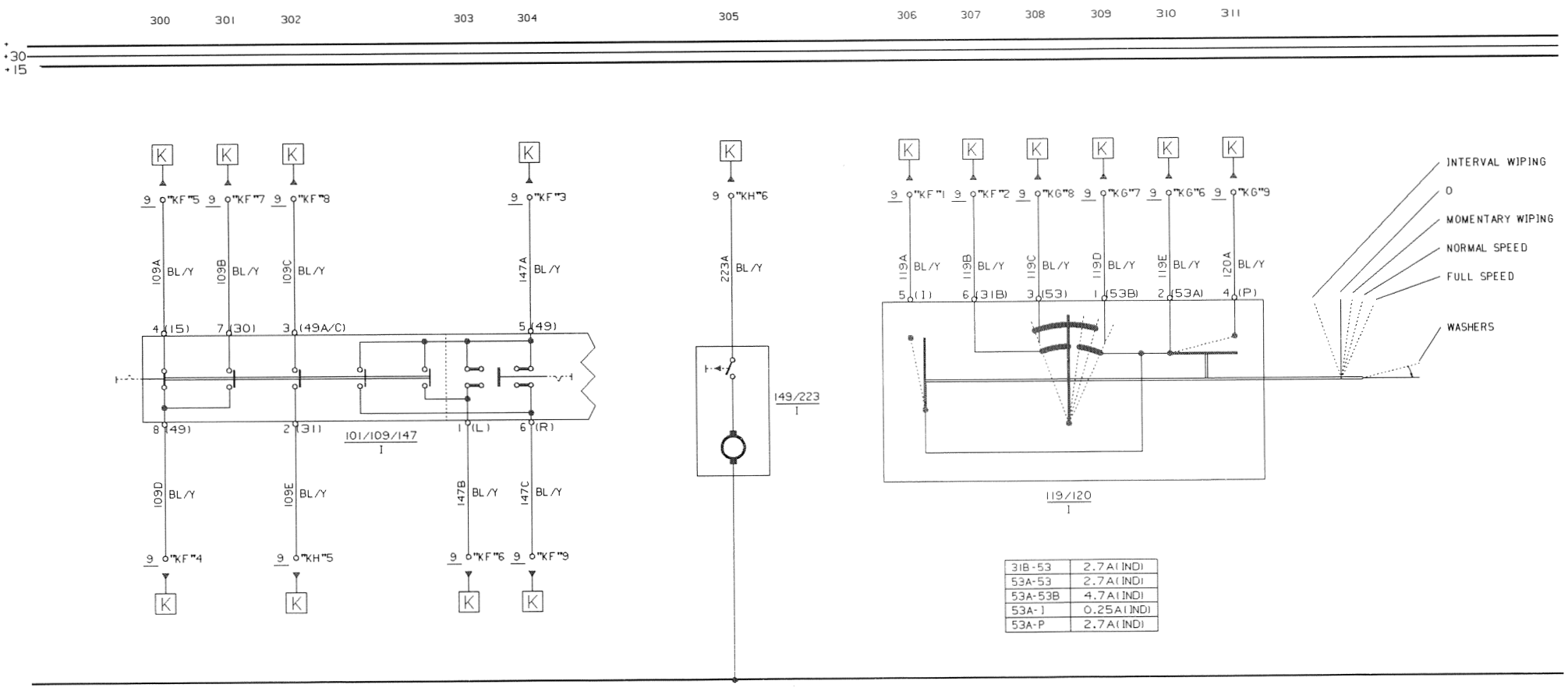

31B-53	2.7A(IND)
53A-53	2.7A(IND)
53A-53B	4.7A(IND)
53A-1	0.25A(IND)
53A-P	2.7A(IND)

Hazard warning lights/ direction indicators

Horn

Windscreen wash/wipe switches

Electrical centre, connectors

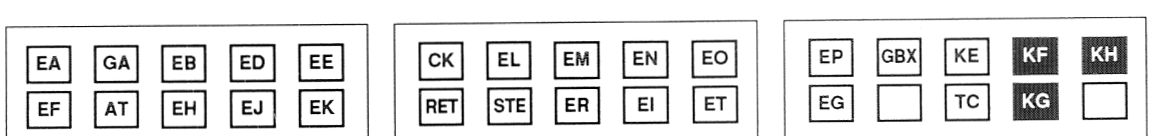

No.	Component
101/109/147	Hazard warning lights and direction indicators switch
119/120	Windscreen wash/wipe switch
149/223	Horn switches/ring

Circuit descriptions

All three circuits on this schematic diagram are connected to body wiring via connectors KF, KG and KH.

Hazard warning lights/direction indicators

These are operated by stalk switches (101/109/147) on the steering column. The direction indicators use the +15 supply, via KF15, and the hazard warning lights use the "+" supply, via KF7. The body-mounted lights are connected via KF6 (left indication) and KF9 (right indication). The other connections are via KF4 (direction indicators "49"), KF5 (direction indicators "15"), KF7 (direction indicators "30"), KF8 (direction indicators "49 a/c"), and KH5 (direction indicators main switch).

Horn

The horn is grounded via the horn switches (149), the ring contact (223) and connector KH6.

Windscreen wash/wipe

The windscreen washer pump and wiper motor are operated by stalk switches (119/120) on the steering column, being supplied from the body electrical system via KG6. KF1 goes to the interval relay for delay wiping, KF2 goes to the wiper motor park contact, KG8 goes to the wiper motor slow speed contact and KG7 goes to the wiper motor normal speed contact. KG9 carries the feed to the windscreen washer pump.

The table at the bottom right of the schematic provides information to the body builder as to the maximum permissible current and inductive loading which can be connected to the switch terminals indicated in the table. This applies to the washer and wiper motors, and the limitations are to ensure that the contacts in the switches (119/120) will not be damaged by sparking.

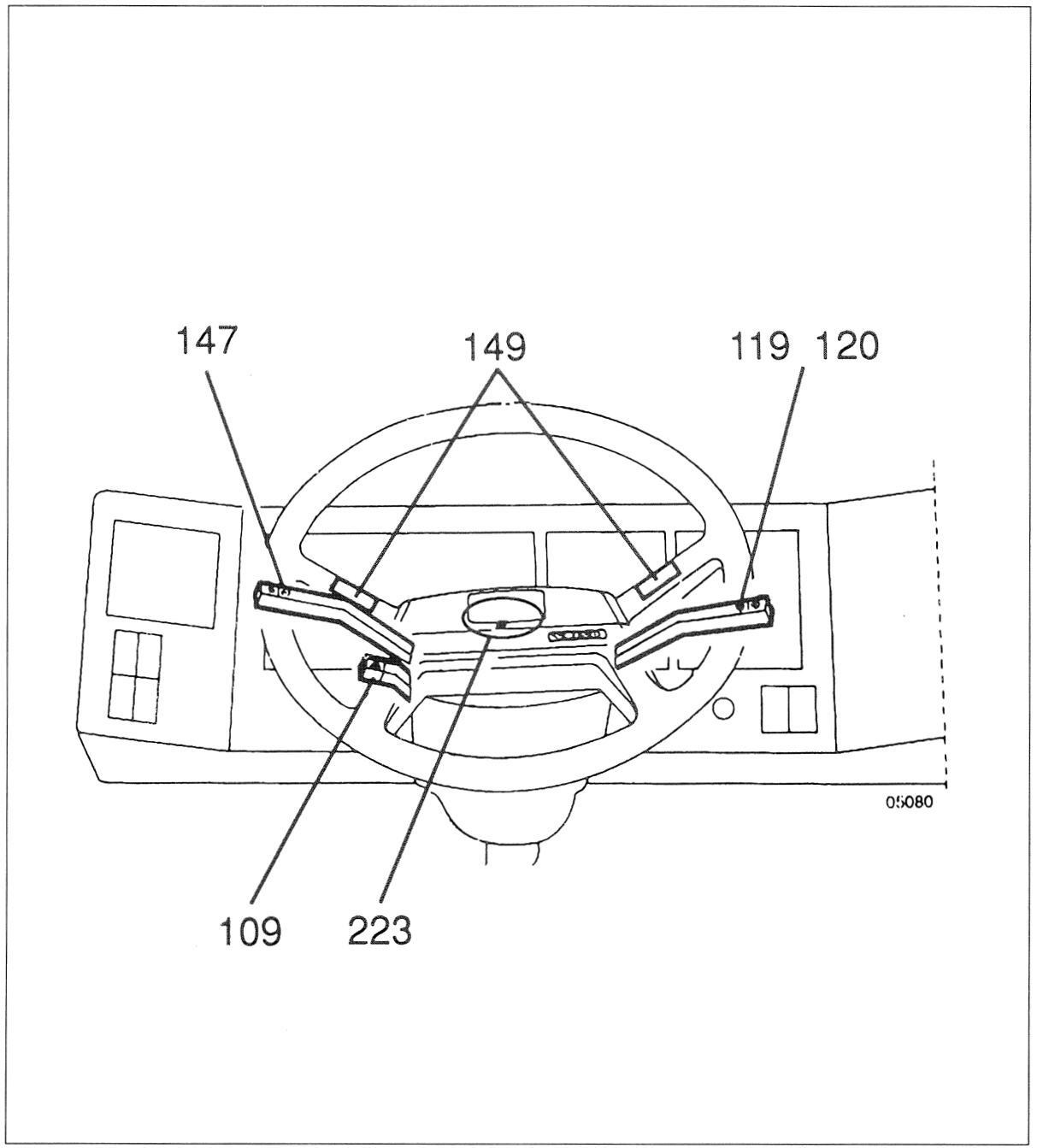

Steering column horn switch and steering column switches

16 Fire warning, heated air drier

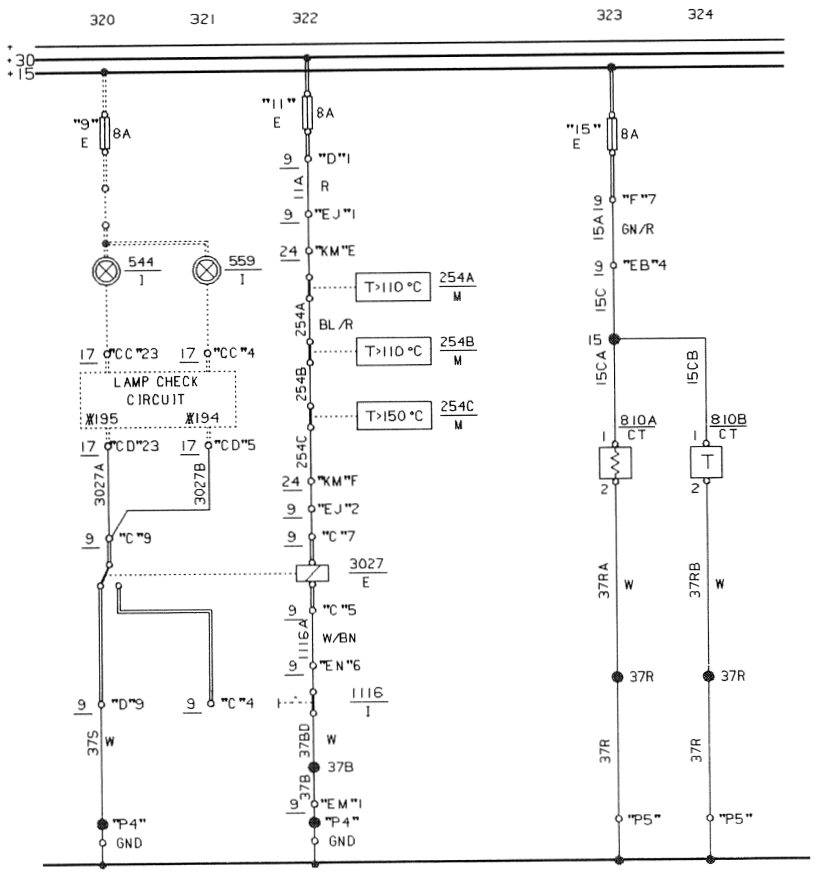

Fire warning

Heated air drier

Electrical centre, connectors

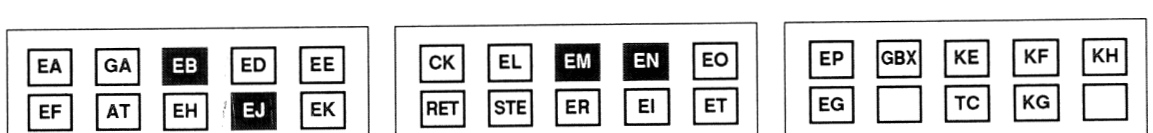

Fuse	Rating	Circuit protected by fuse
"9"	8A	Fire warning lamps
"11"	8A	Fire warning control system
"15"	8A	Air drier system

No.	Component
254A/B/C	Engine compartment thermal break contacts
544	Warning lamp, engine compartment temperature high
559	Warning lamp, fire in engine compartment
810A	Air drier thermostatic heating element
810B	Air drier changeover timer
1116	Fire warning test switch
3027	Fire warning lamp and buzzer relay

Circuit descriptions

Fire warning system

The fire and high temperature warning lamps (544 and 559) are wired in parallel, so that both lamps will light if any of the thermal break contacts (254) opens and de-energizes relay (3027). The warning condition is shown in the schematic. Normally this relay will be energized, but if the test switch (1116) is pressed, it will de-energize and the lamps should light, confirming that they are serviceable.

The 150°C contact is positioned above the turbocharger.

Air drier

The thermostatic heating element (810A) at the bottom of the air drier prevents condensed water from freezing and blocking the air supply. The changeover timer (810B) switches the air input from one drier to the other every minute. During changeover the current consumption should be 0 to 0.4A; if a constant current is maintained for longer than 1 minute the changeover solenoid is faulty.

The operation of the thermostat in (810A) can be checked by placing it, together with a thermometer, in a mixture of ice and water to cool it down from normal room temperature. With a suitable resistance measuring instrument (or a buzzer), connected between the terminals, note the temperature when it switches on. This should occur at between +13°C and +1°C.

The opening temperature is checked by letting the thermostat warm up slowly. The switch should open at between +26.5 and 32.5°C.

Check the heating element (810A) by measuring its current consumption, which should be between 3 and 4 amperes, with a 24 to 28V supply.

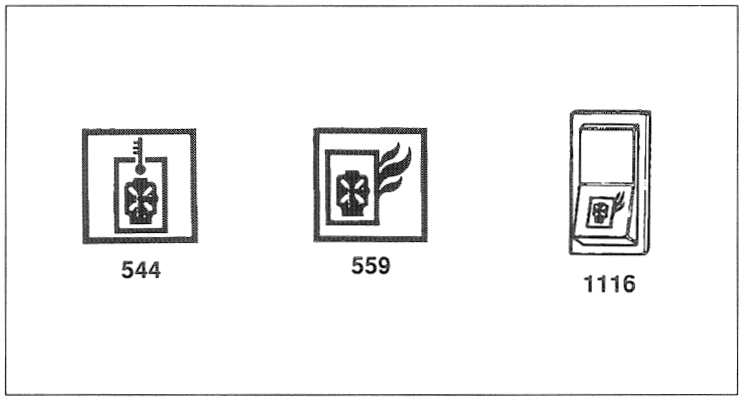

544 High temperature warning lamp
559 Fire warning lamp, 1116 Test switch

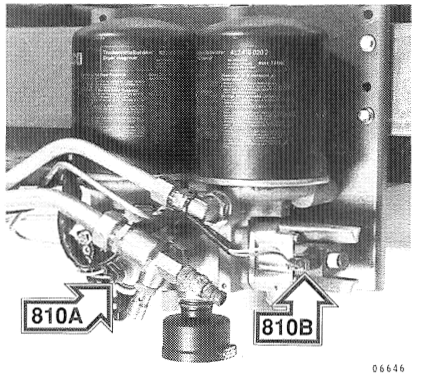

810A Air drier thermostatic heating element
810B Air drier changeover timer

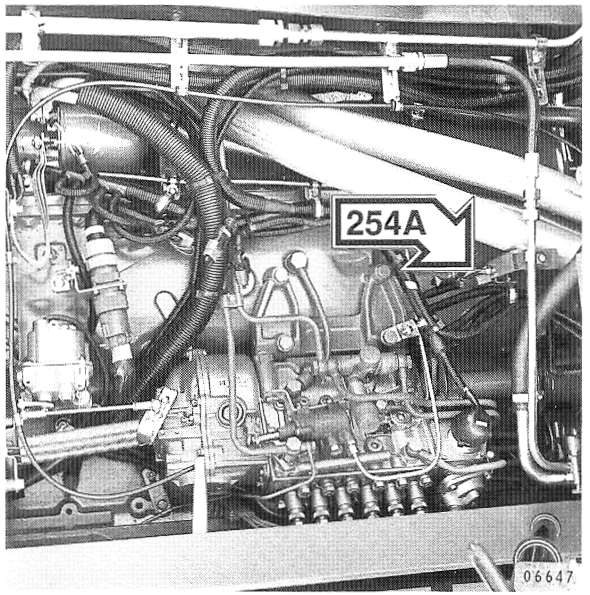

254A B10B Engine compartment thermal break contact
(254 B/C are installed by the body builder)

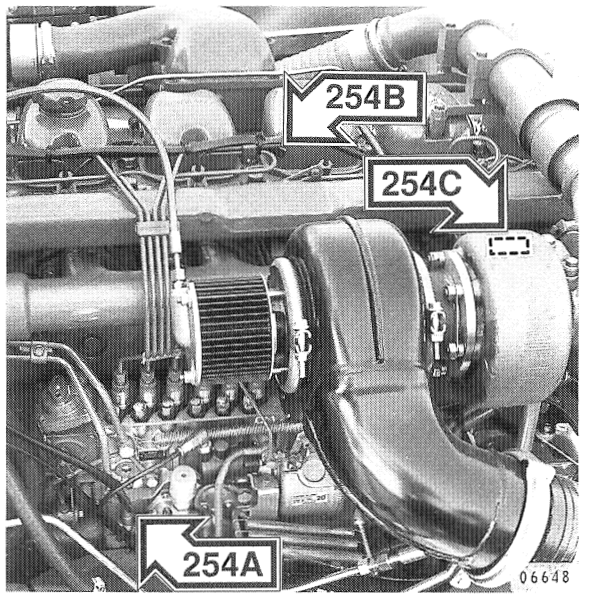

254A/B/C B12 Engine compartment thermal break contacts

17 Differential lock, bogie

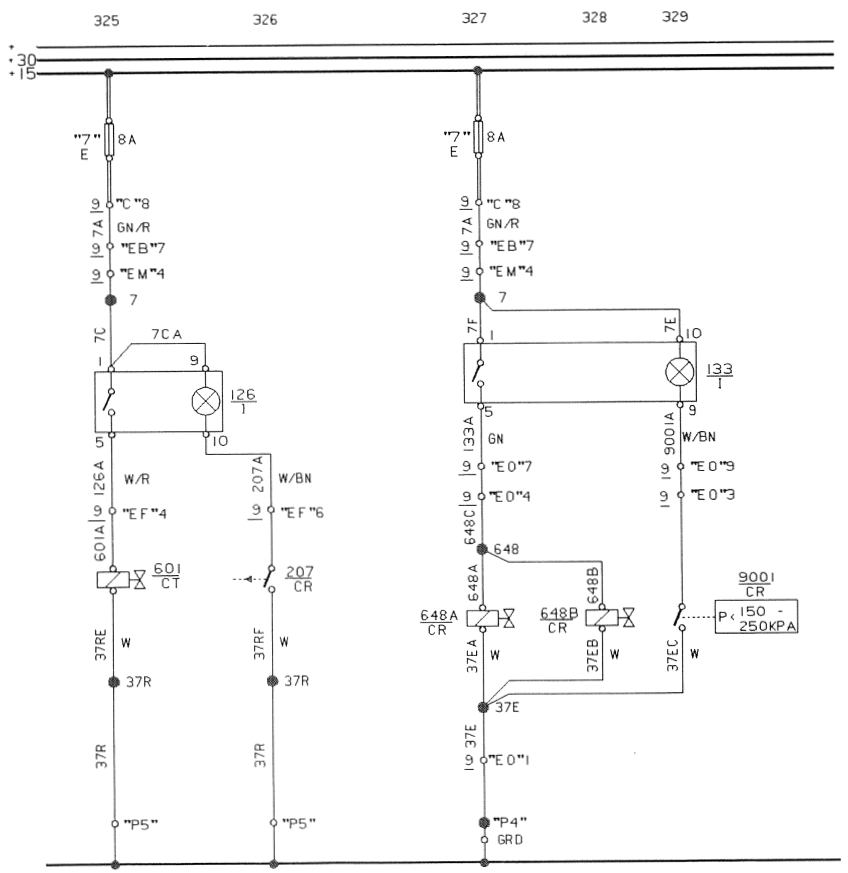

Differential lock Bogie

Electrical centre, connectors

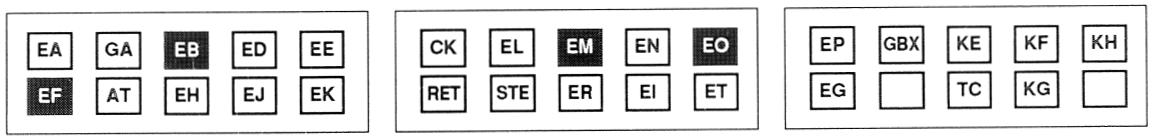

Fuse	Rating	Circuit protected by fuse
"7"	8A	Differential lock and bogie circuits

No.	Component
126	Differential lock switch
133	Bogie switch
207	Differential lock indicator lamp closing contact
601	Differential lock solenoid valve
648A	Bogie solenoid valve
648B	Auxiliary bogie solenoid valve
9001	Bogie air pressure sender

Circuit descriptions

Differential lock system

In the differential lock circuit the solenoid valve (601) energizes to send compressed air to a membrane in the differential lock actuator. A mechanical switch in the differential lock closes contact (207) to indicate by means of the lamp (126) in the switch that differential locking is actually engaged.

Bogie system

When the bogie switch (133) is pressed, solenoid valves (648A/B) are energized and release air pressure from the bogie air suspension. When the pressure falls low enough to release the bus weight from the bogie, the sender (9001) contact closes to light the lamp in the switch.

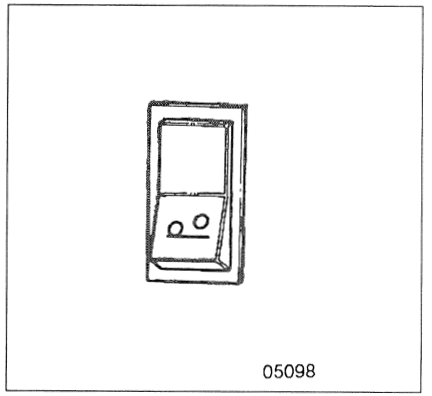

133 Bogie switch

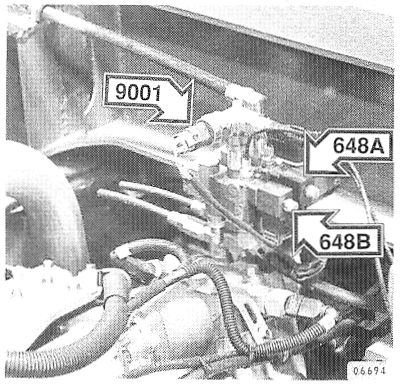

B12 Bogie system components

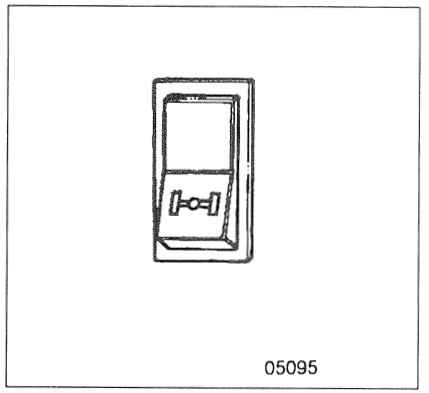

126 Differential lock switch

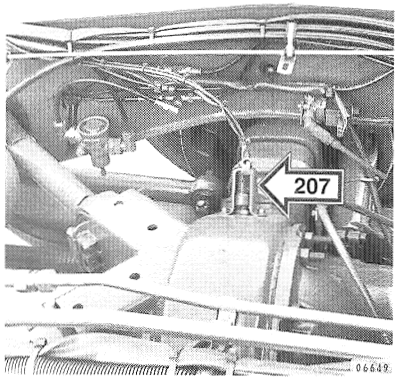

207 Differential lock indicator lamp closing contact (B10B)

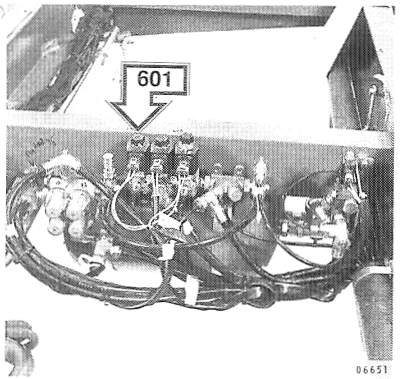

601 Differential lock solenoid valve

18 Volvo G7 EGS transmission system (Sheet 1 of 2)

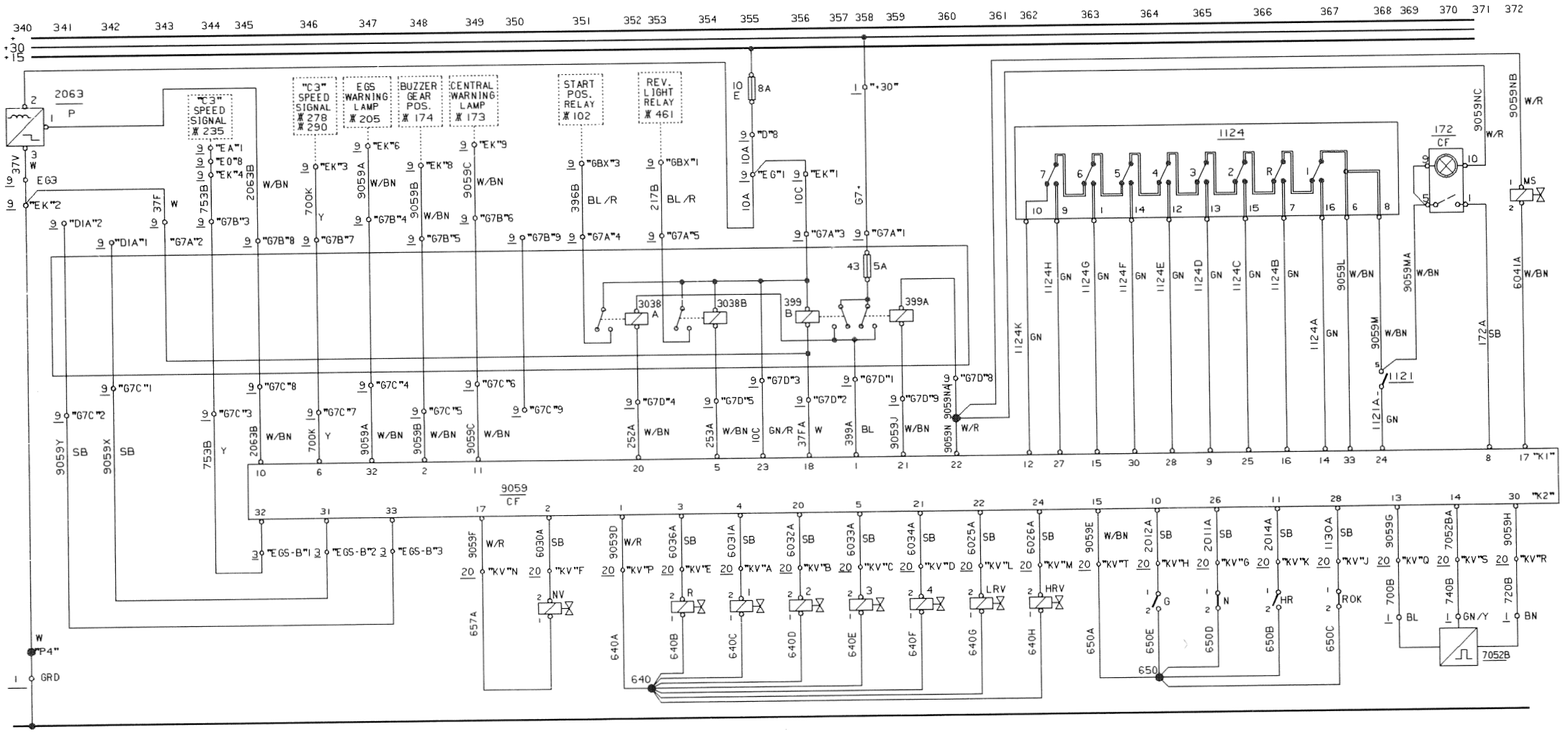

Electrical centre, connectors

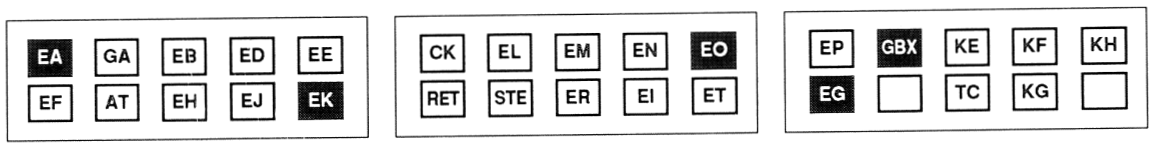

Fuse	Rating	Circuit protected by fuse
"10"	8A	Volvo G7 EGS transmission system
"43"	5A	Volvo G7 EGS transmission control unit

No.	Component
172	"Limp-home" switch and lamp
399A	EGS safety neutral relay
399B	EGS control unit feed relay
1121	EGS transmission fault diagnosis check switch
1124	Gear selector microswitches
2063	Clutch position inductive switch
3038A	EGS start inhibit polarity switching relay
3038B	EGS reversing lights polarity switching relay
7052B	Transmission speed sender
9059	Volvo G7 EGS transmission control unit

Volvo G7 EGS solenoid valves and switch contacts

1	First gear solenoid valve
2	Second gear solenoid valve
3	Third gear solenoid valve
4	Fourth gear solenoid valve
G	Gear engaged switch contact
HR	High range switch contact
HRV	High range solenoid valve
LRV	Low range solenoid valve
MS	Gear lever inhibit cylinder solenoid valve
N	Neutral switch contact
NV	Neutral solenoid valve
R	Reverse gear solenoid valve
ROK	Planet gears engaged switch contact

Circuit description

Feed relay (399B) energizes when the engine is switched on. Its closed contact then supplies current from the +30 line via fuse "43" to terminal 1 of the control unit (9059). Terminal 22 of (9059) then energizes relay (399A), since terminal 21 is grounded. When the engine is switched off, or if the supply from the +15 line is broken, relay (399A) remains energized and the currently selected gear remains selected until the control unit (9059) detects that the driver has selected neutral. If the road speed is less than 3 to 5 km/h, the control unit sets the gear selector and the gearbox to neutral regardless of the driver's actions. In this condition the control unit breaks the negative connection at pin 21 and relay (399A) de-energizes to remove the supply from the control unit.

(Continued on page 61)

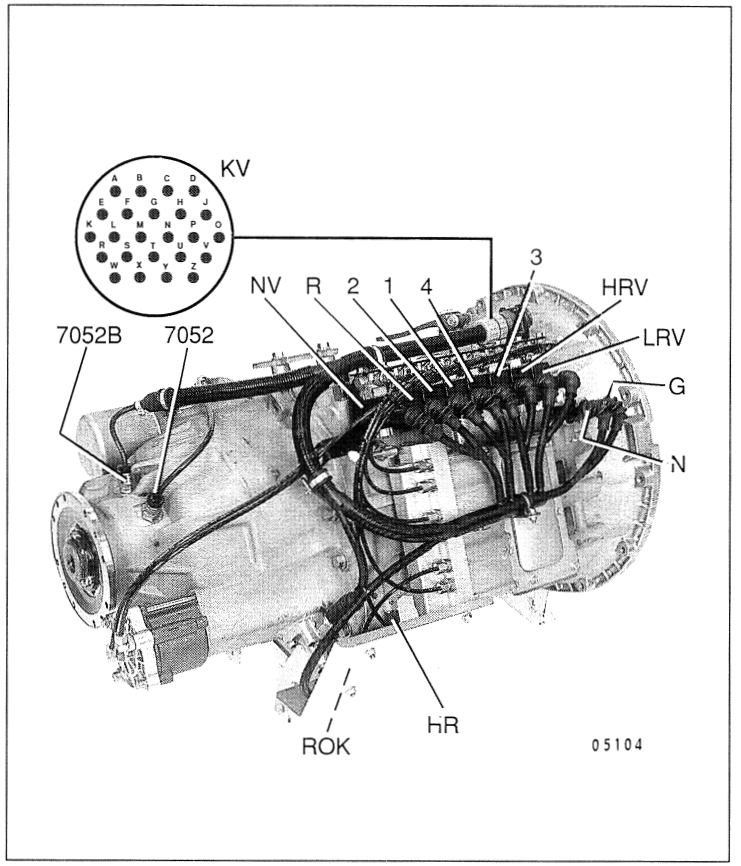

EGS components mounted on G7 transmission

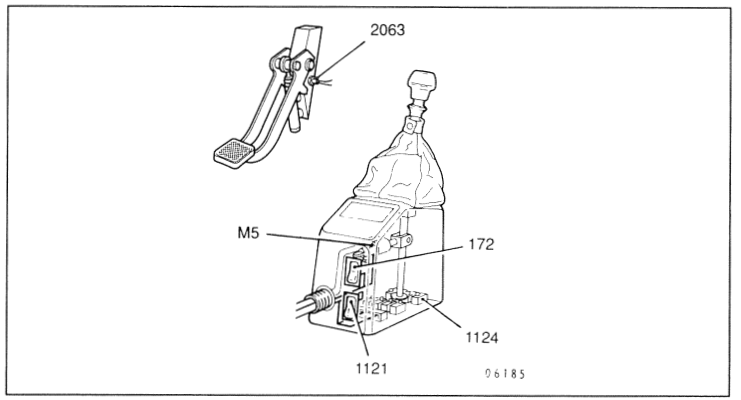

EGS operating switches

Control unit (9059) K1 connections

1 +24V supply via (399A) or (399B)
2 (–) signal to activate buzzer
5 (–) to energize relay (3038B)
6 Signal from speedo/tachograph
8 (–) for "limp-home" switch/ lamp (172)
9, 12, 14, 15, 16, 25, 27, 28, 30 (–) signals from gear selector microswitches
10 "Ground" signal from (2063); approx. 0.8V with clutch pedal depressed
11 (–) signal to activate central warning
17 Signal to activate MS solenoid valve
18 Control unit ground
20 (–) to energize relay (3038A)
21 (–) to energize relay (399A)
22 +24V supply to MS, (399A) and (172)
23 Permanent (+) from fuse "10"
24 (–) signal to diagnostic switch (1121)
32 (–) signal to light warning lamp (541)
33 Common (+) for gear switches (1124)

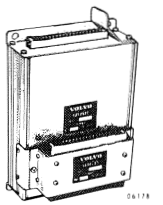

Control unit (9059) K2 connections

1 (+) supply to gear solenoid valves
2, 3, 4, 5, 20, 21, 22, 24 (–) gear changing signals
10, 11, 26, 28 Gear switch contacts, (–) when closed
13 +24V to transm. speed sender
14 (–) to transm. speed sender (7052B)
15 Ground for gear switch contacts
17 (+) supply to NV solenoid valve
30 Transmission speed pulses, input transm. speed sender (7052B)
32 Engine speed signal input

18 Volvo G7 EGS transmission system (Sheet 2 of 2)

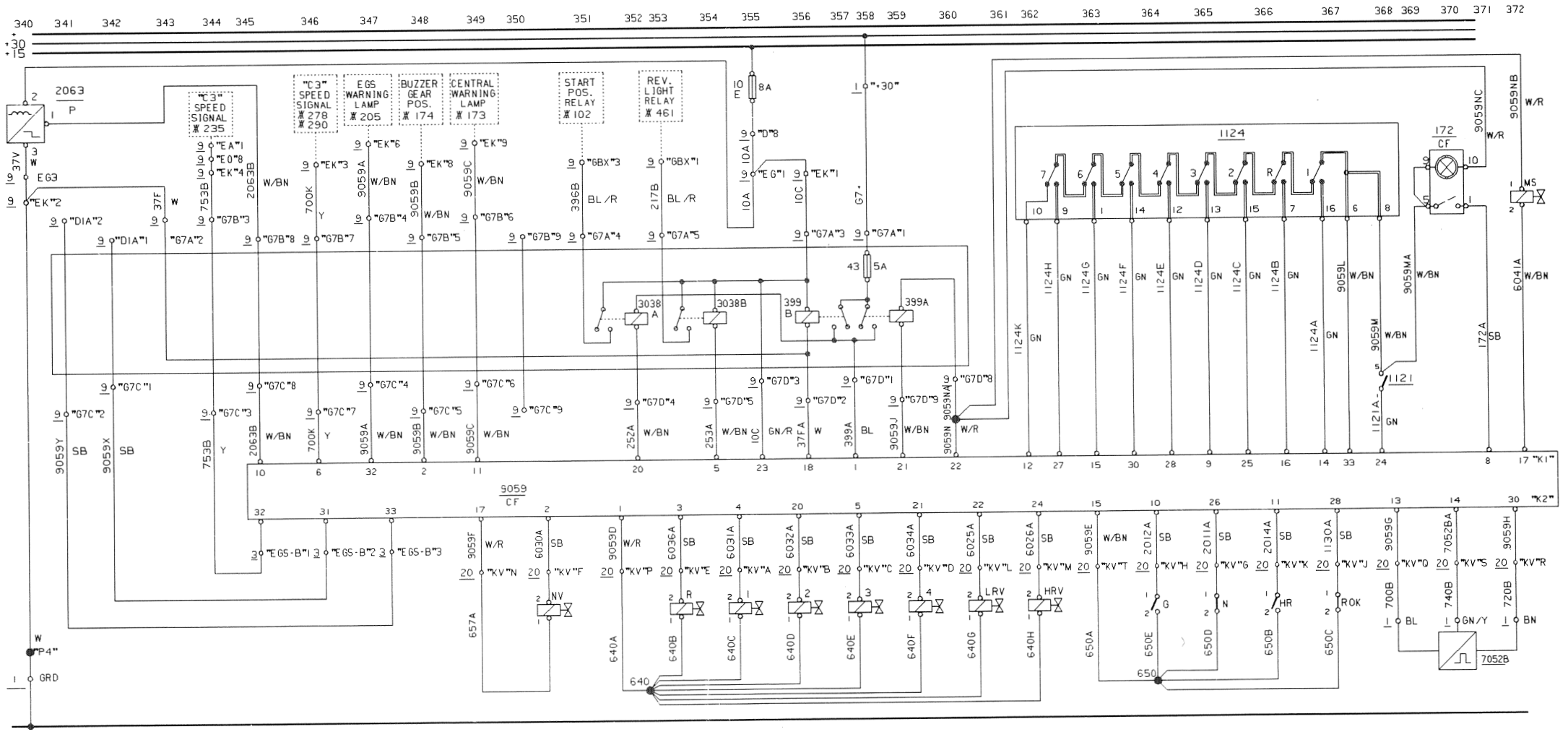

Electrical centre, connectors

EA	GA	EB	ED	EE
EF	AT	EH	EJ	EK

CK	EL	EM	EN	EO
RET	STE	ER	EI	ET

EP	GBX	KE	KF	KH
EG		TC	KG	

(Continued from page 59)

The inductive sender (2063) in current path 340 provides a low signal to the control unit (9059) terminal 10 when the clutch is fully depressed, i.e. when the metal of the clutch pedal comes within the sensing range of the inductive circuit in the sensor. This sends a signal to the control unit to confirm that the clutch has been released.

The computer program in the control unit includes fault diagnosis and warning functions; the output at terminal 32 lights the lamp on the instrument panel (current path 205) for fault diagnosis, or in the case of a warning, causes the lamp to flash.

When the gear lever is set to neutral the microswitches (1124) send a "–" signal via K1 terminal 12 to the control unit. Physical confirmation that the transmission has actually gone into neutral is given by switch contacts N (neutral) and G (gear engaged). Contact N presents a "–" signal to K2 terminal 26, while contact G opens, which means that approximately +24V is present at K2 terminal 10. The circuit schematic diagram shows these switch contacts in the neutral gear position. If these two conditions are not met with the gear selector set to neutral, the control unit presents a "–" signal to K1 terminals 2 (activating the buzzer), 11 (activating the central warning lamps) and 32 (activating the EGS warning lamp).

All the solenoid valves are closed when they are de-energized.

To ensure that relay (396) (see Schematic 6) will energize to permit engine starting, the control unit sets K2 terminal 20 to "–" once the neutral gear position has been confirmed by switch contacts N and G as described above, or the clutch is depressed, as sensed by the clutch pedal position sensor (2063), thereby energizing the polarity switching relay (3038A). In either case, the engine speed, as reported by the engine speed sensor (7052B) to K2 terminal 30, must be below 300 r/min.

The "limp-home" emergency switch (172) on the EGS gear lever housing permits five of the gears to be selected if the system has partially failed. Gear changing will however be slower than usual if the switch is used. Only the clutch sensor (2063) input remains connected.

In case of a total failure, the "limp-home" card located on the side of the control unit (9059) can be connected via the 35-pin connector instead of the control unit, allowing a limited gear-changing function.

The system can be reprogrammed with the aid of a DIP switch located underneath the control unit (9059) to suit different gearbox and engine combinations.

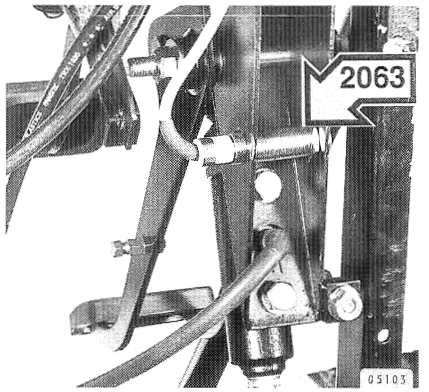

2063 Clutch position inductive switch

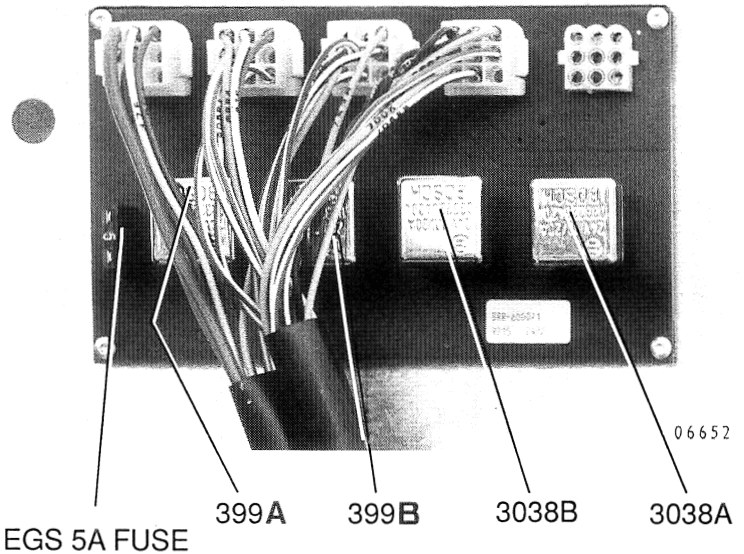

EGS board

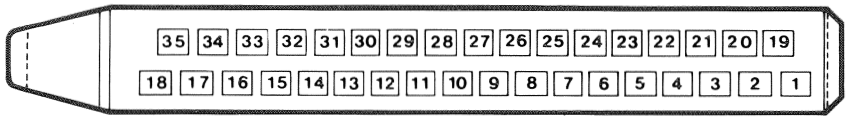

Pin numbering on EGS connectors K1 and K2

19 ZF HP 500/590/600 transmission system (Sheet 1 of 2)

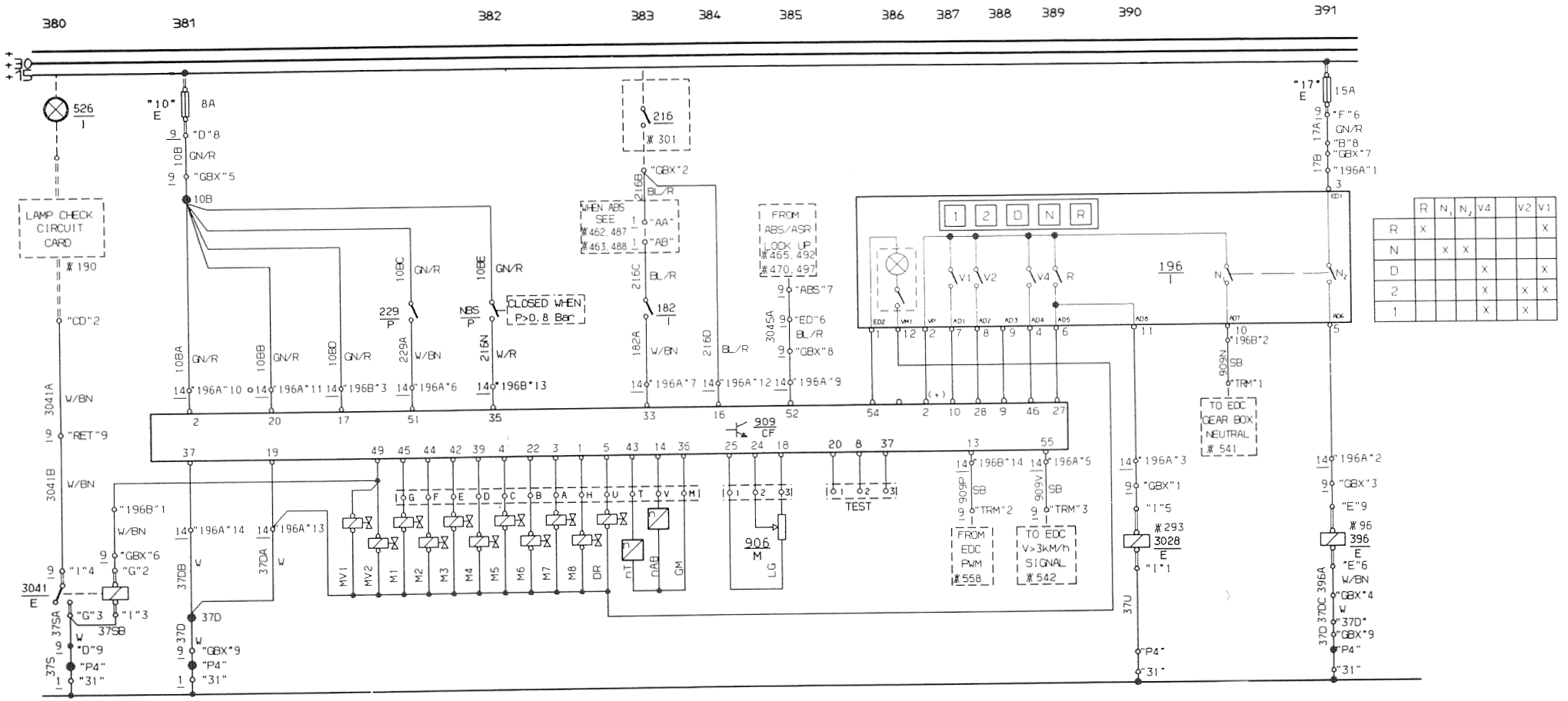

	R	N1	N2	V4		V2	V1
R	X						X
N		X	X				
D				X			X
2				X		X	X
1				X		X	

Electrical centre, connectors

EA	GA	EB	ED	EE
EF	AT	EH	EJ	EK

CK	EL	EM	EN	EO
RET	STE	ER	EI	ET

EP	GBX	KE	KF	KH
EG		TC	KG	

Fuse	Rating	Circuit protected by fuse
"10"	8A	ZF HP 500/590/600 transmission system
"17"	16A	Transmission start position relay

No.	Component
182	Retarder switch
196	ZF gear selector switches
216	Brake lights closing contact
229	Kick-down switch
396	Transmission start position (neutral) relay
526	Retarder indicator lamp
906	Modulator
909	ZF HP 500/590/600 transmission control unit
3028	Reversing lights relay
3041	Transmission retarder indicator lamp relay

ZF HP solenoid valves and inductive sensors

M1-M8	Gear engagement
MV1-2	Retarding function
nT	Turbine speed sensor
nAB	Output speed sensor
DR	Modulator gear change pressure

Circuit description

The ZF HP transmissions used in Volvo buses incorporate solenoid valves (M2) to (M8) inclusive, built into the transmission. Retarder valves (MV1) and (MV2) are mounted externally. The modulator (906) consists of a potentiometer which regulates the voltage to terminal 24 of the control unit (9059) from 0.5V at low idle to approximately 4V at full throttle. This signal is then converted to a direct current in the control unit to control pressure modulation on the gearbox internal clutch pressure plates.

The accelerator pedal kick-down position switch (229) provides a kick-down signal by applying a "+" signal to terminal 51 of the control unit (909).

To prevent a gear being selected by accident without anyone sitting in the driving seat when the bus is standing still, the system will only engage a gear within 2 seconds of sensing that the brake pedal has been pressed. If the brake pedal has not been pressed within this time span, neutral must be selected again before another attempt is made.

(Continued on page 65)

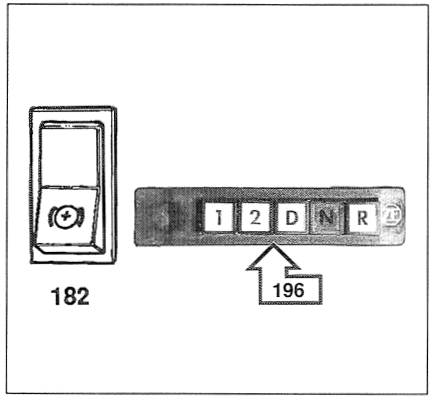

182 Retarder switch
196 ZF gear selector switches

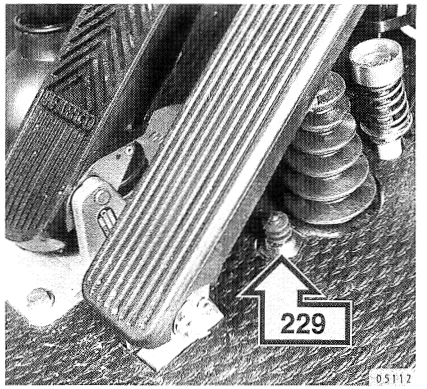

229 Kick-down switch

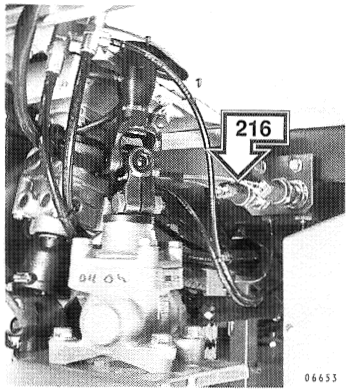

216 Brake lights closing contact

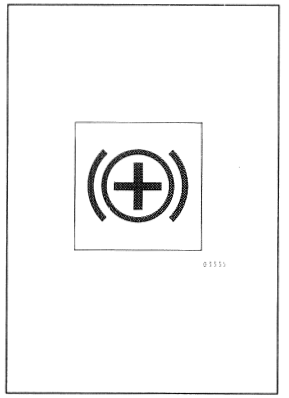

526 Retarder indicator lamp

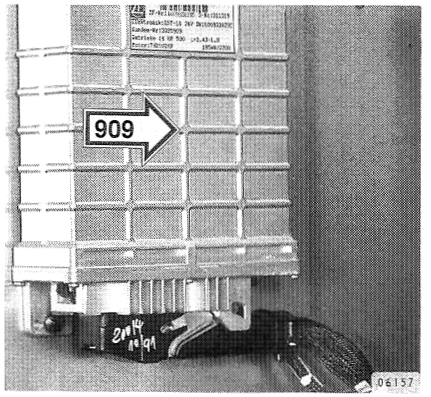

909 ZF HP 500/590/600 transmission control unit

Control unit (909) connections

1, 3, 4, 5, 22, 39, 42, 44, 45
+24V switched supply to M1-M8, DR
2, 17, 20 +24V supply from fuse "10"
9, 10, 27, 28, 46
"+" inputs from gear selector switches
14 nAB output speed sensor signal
16 Brake lights on signal input
18 "–" to modulator (906)
19, 37 Control unit ground
24 Modulator (906) signal, +0.5V at low idle, approx. +4V at full throttle
25 +5V to modulator (906)
33 Braking or retarding signal input
36 Speed sensor ground
43 nT turbine speed sensor signal
49 +24V switched supply to MV1, MV2 and (3041)
51 Kick-down signal input
52 ABS lock-up off signal input
54 (+) to gear selector lamp

Note that some of the control unit (909) connectors are shown twice on the schematic diagram, for clarity.

Gear engagement solenoid valves

Gear	Activated valves
Reverse, 4HP	M5 and M2
Reverse, 5HP	M5 and M2
First	M7 and M2
Second	M7 and M3*
Third	M7 and M4*
Fourth, 4HP	M7 and M6*
Fourth, 5HP	M7 and M6*
Fifth, 5HP	M6 and M4*

* Solenoid valve M8 is also activated when the lock-up clutch is engaged.

19 ZF HP 500/590/600 transmission system (Sheet 2 of 2)

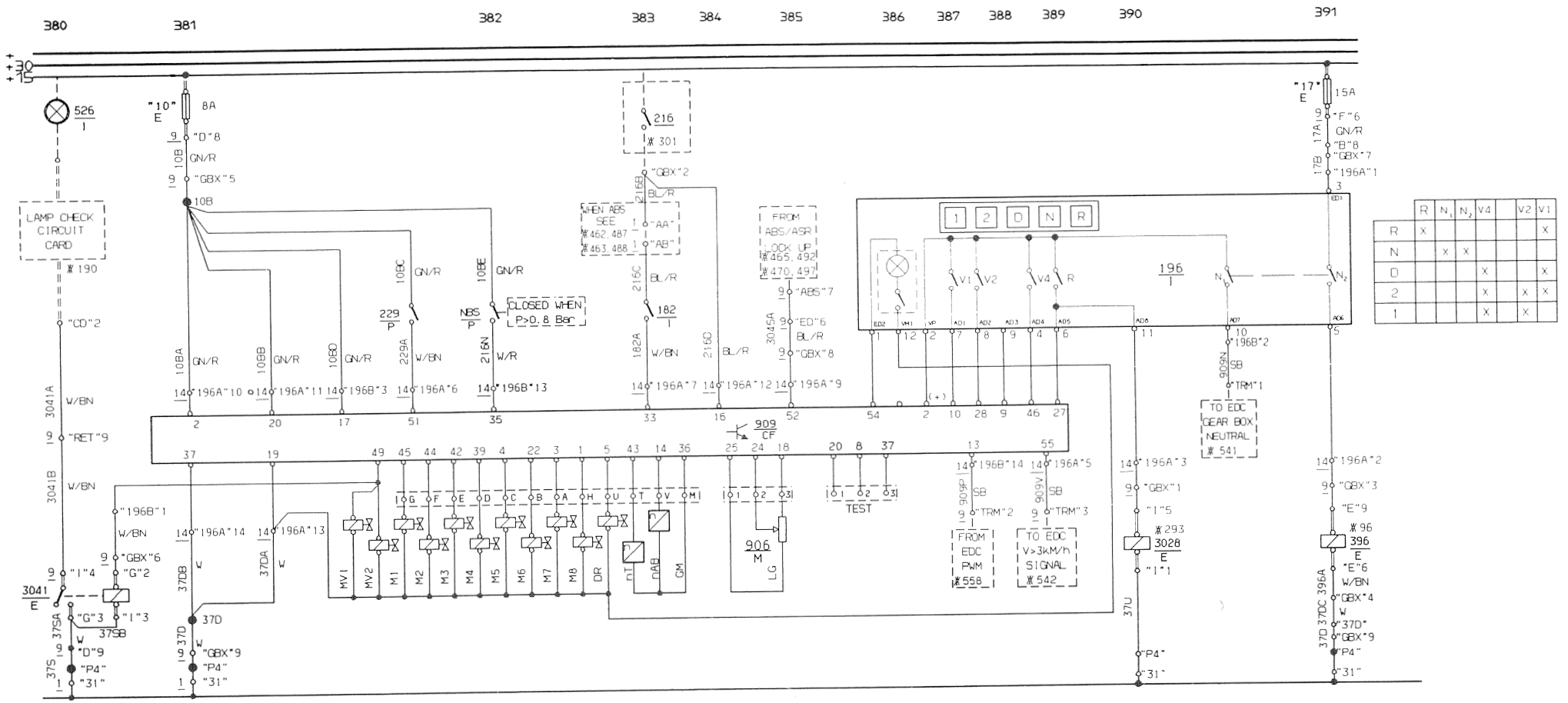

	R	N1	N2	V4		V2	V1
R	X						X
N		X	X				
D				X			X
2				X		X	X
1				X		X	

Electrical centre, connectors

EA	GA	EB	ED	EE
EF	AT	EH	EJ	EK

CK	EL	EM	EN	EO
RET	STE	ER	EI	ET

EP	GBX	KE	KF	KH
EG		TC	KG	

(Continued from page 63)

The NBS connector, power path 382, gives a variant function that allows the gearbox to go into neutral when braking and stationary as this cuts back on fuel consumption.

The modulator (906) described on page 63 is mounted on the engine and is operated via a control on the injection pump. If the engine has EDC (see page 78), this modulator is not fitted; instead a signal is monitored from the EDC-system's control unit.

If the ABS system begins to operate, relay (3046) in current path 468 (Schematic 21) is energized. This opens a contact in the retarder line (current path 385) and prevents retarding via the built-in ZF transmission retarder. The transmission lock-up is also switched out when ABS is operating – see Schematic 22.

The ZF gear selector switch and lamp circuit is shown below. When second gear is selected by pressing button 2 for example, lamp "2" is lit, being fed from terminal 1 and grounded via the switch and terminal 12. Switches V4, V2 and V1 also close, allowing the input voltage at terminal 2 to be applied to terminal 7. This voltage then signals the control unit (909) to engage second gear by the appropriate solenoid valves, M3 and M7. The other gear selector switches operate similarly.

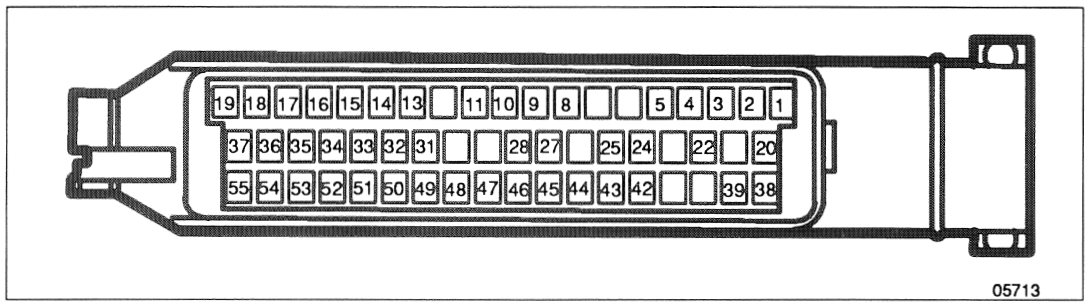

ZF EST 18 control unit connections

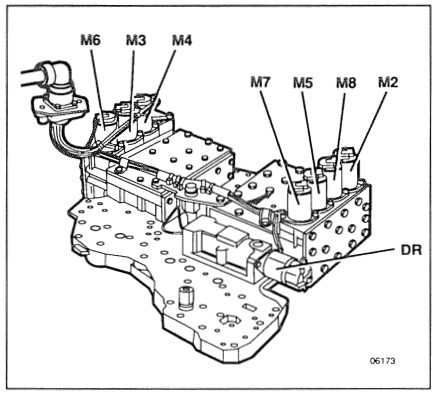

ZF gear engagement solenoid valves

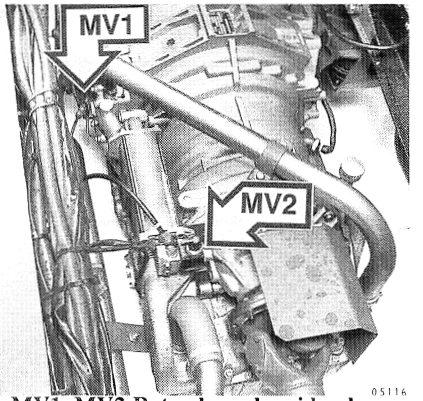

MV1, MV2 Retarder solenoid valves

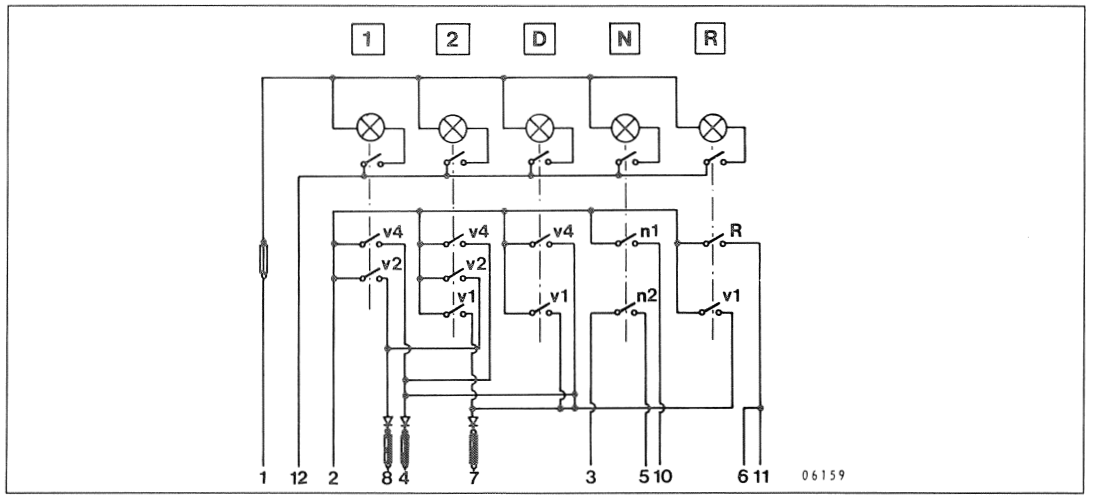

ZF gear selector lamps and switches

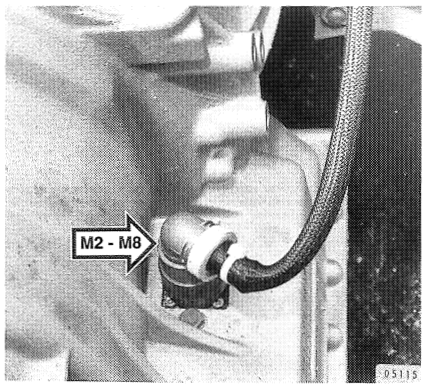

Gear engagement solenoid valves connector

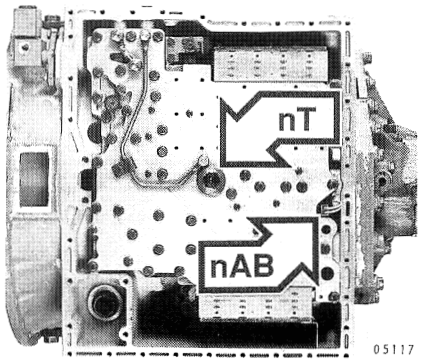

nT Turbine speed sensor
nAB Output speed sensor

20 Voith hydraulic braking retarder, electrical system

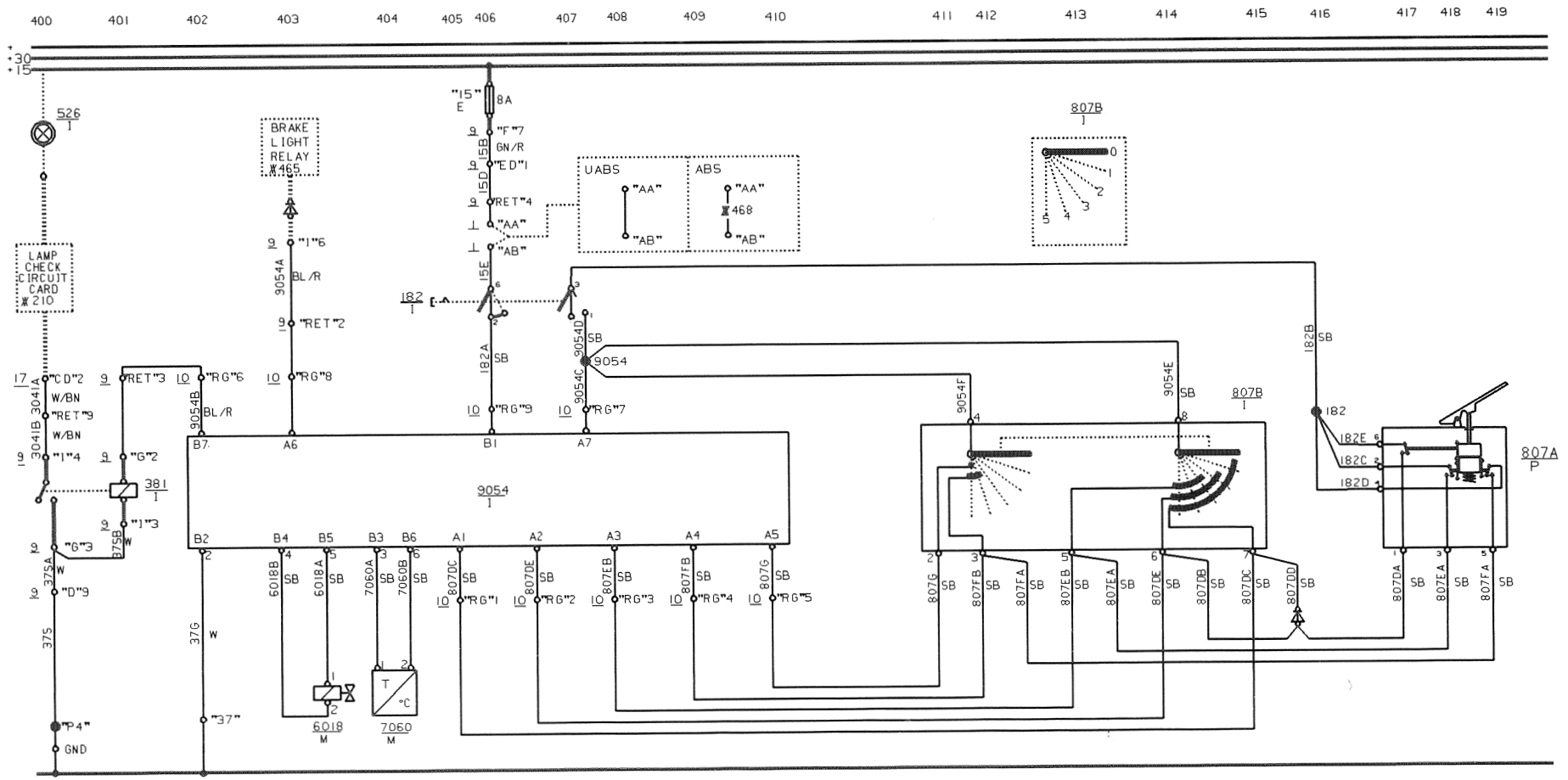

Electrical centre,
connectors

EA	GA	EB	**ED**	EE
EF	AT	EH	EJ	EK

CK	EL	EM	EN	EO
RET	STE	ER	EI	ET

EP	GBX	KE	KF	KH
EG		TC	KG	

Fuse	Rating	Circuit protected by fuse
"15"	8A	Voith hydraulic braking retarder electrical system

No.	Component
182	Retarder switch
381	Retarder indicator lamp relay
526	Retarder indicator lamp
807A	Footbrake pedal retarder microswitches
807B	Retarder hand control
903	Diode
6018	Voith hydraulic retarder solenoid valve
7060	Retarder temperature sender
9054	Voith hydraulic retarder electrical system control unit

Circuit description

The hand control (807B) gradually switches in more circuits in the control unit (9054) as it is moved from position 1 to position 5, first terminal A1 only, then A1 and A2, then A1, A2 and A3 and so on to apply more and more retardation. Note that the hand control (807B) is shown divided on the diagram, so that when for example it is in position 4, control unit (9054) terminals A1, A2, A3 and A4 are all switched in.

Some versions of this retarder include an extra foot control, with microswitches (807A) located on the footbrake valve. These act in the same way as the hand control, gradually increasing the retardation by successively switching in terminals A1, A2 etc. on the control unit (9054) as the pedal is depressed further.

The retarder solenoid valve (6018) is controlled directly by the control unit (9054) and determines the amount of retardation applied by allowing compressed air into the hydraulic retarder system.

The temperature sender (7060) signals control unit (9054) if the coolant temperature reaches 96°C. This causes the indicator lamp (526) on the instrument panel to flash, indicating excessive retarder temperature, and the retardation will automatically be reduced to prevent overheating.

In buses with ABS, a retarder inhibit relay (3046) is wired between "AA" and "AB" (current path 468). This overrides retarder operation when ABS braking is applied; see Schematic 22 for further details.

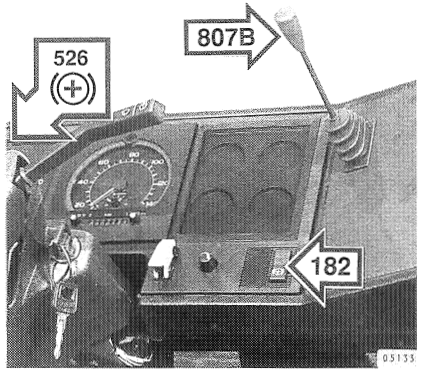

Instrument panel components

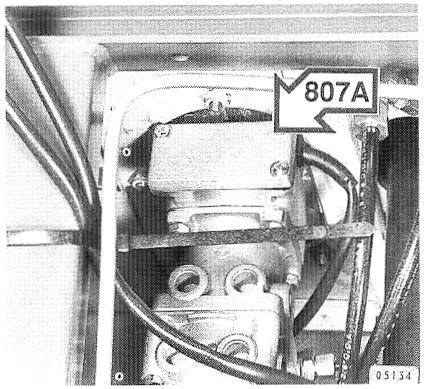

807A Footbrake pedal retarder microswitches

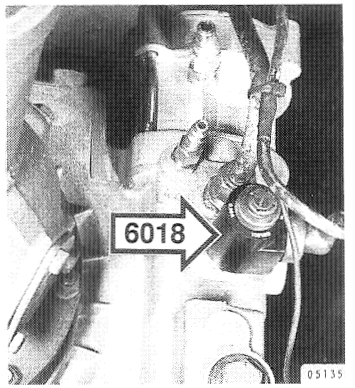

6018 Voith hydraulic retarder solenoid valve

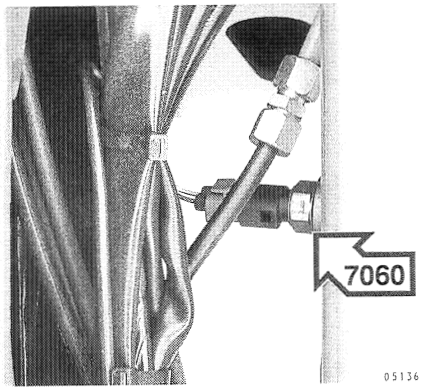

7060 Retarder temperature sender

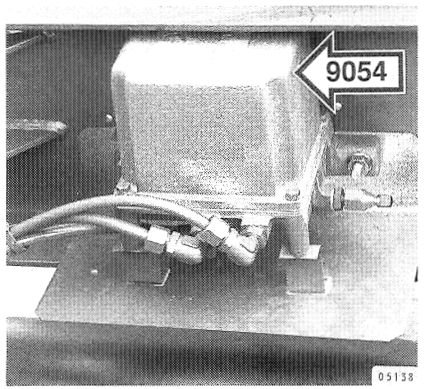

Voith hydraulic retarder electrical system control unit

21 Combined ABS/ASR system (Sheet 1 of 2)

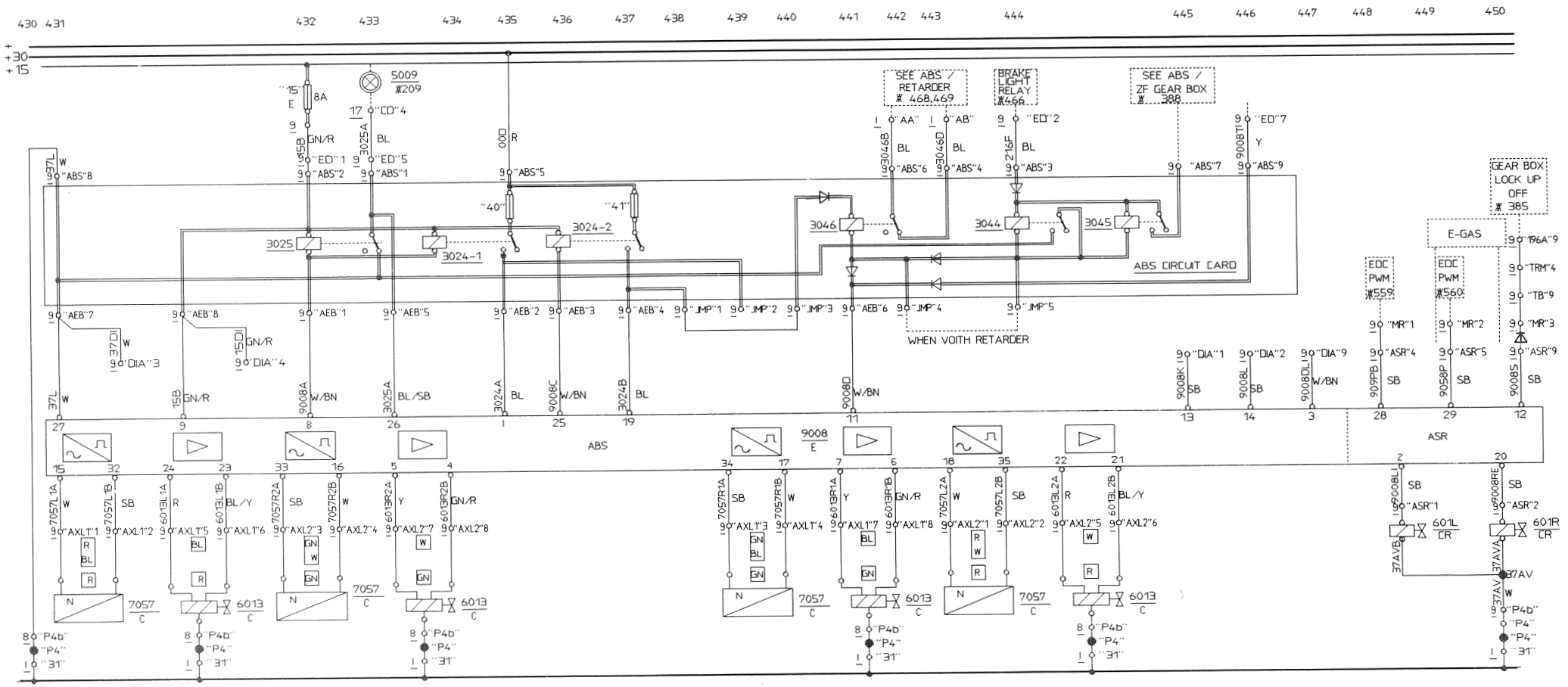

ABS 2-AXLE

GN	RIGHT
R	LEFT
BL	AXLE 1
W	AXLE 2
Y	AXLE 3

TAPE MARKINGS

Electrical centre, connectors

EA	GA	EB	ED	EE
EF	AT	EH	EJ	EK

CK	EL	EM	EN	EO
RET	STE	ER	EI	ET

EP	GBX	KE	KF	KH
EG		TC	KG	

Fuse	Rating	Circuit protected by fuse
"15"	8A	ABS control system
"40"	8A	ABS control unit feed 1
"41"	8A	ABS control unit feed 2

No.	Component
601L	Anti-slip solenoid valve, left
601R	Anti-slip solenoid valve, right
3024-1	ABS control unit feed 1 relay
3024-2	ABS control unit feed 2 relay
3025	ABS indicator lamp relay
3044	Automatic transmission lock-up inhibit relay
3045	Auxiliary automatic transmission lock-up inhibit relay
3046	Retarder inhibit relay
5009	ABS indicator lamp
6013	Wheel brake ABS solenoid valves
7057	Road wheel rotation ABS sender
9008	ABS system control unit

Circuit description

The ABS system is independent of normal braking and only comes into operation if one or more wheels begins to lock during braking. The ABS system then takes over control of braking, using its wheel sensor (7057) signals to the four-channel control unit (9008) to determine when and how much brake pressure is to be applied to the wheel (or wheels) which have stopped rotating. The bogie axle (if fitted) has no ABS control.

The relays and fuses for the ABS system are mounted on a special printed circuit board next to the control unit (9008). The JMP1 and JMP3 connectors on this board are connected together by a plain jumper, plugged into the connectors.

The system includes a self-testing procedure which is automatically carried out each time the bus is started, and the result is shown by the indicator lamp (5009), path 433, on the instrument panel. If there is no fault in the system, the lamp switches off as soon as the speed exceeds 7 or 8 km/hr.

(Continued on page 71)

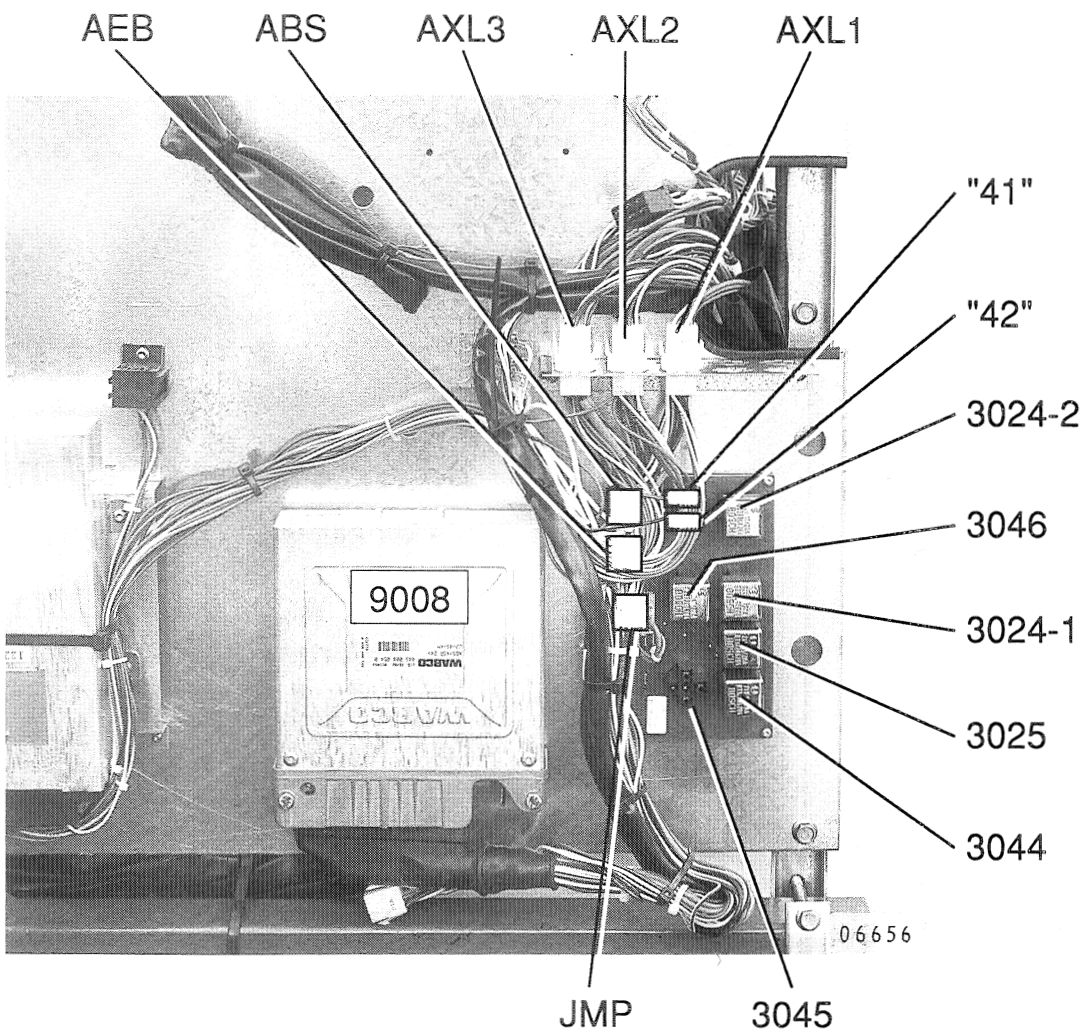

ABS control unit and printed circuit board components

21 Combined ABS/ASR system (Sheet 2 of 2)

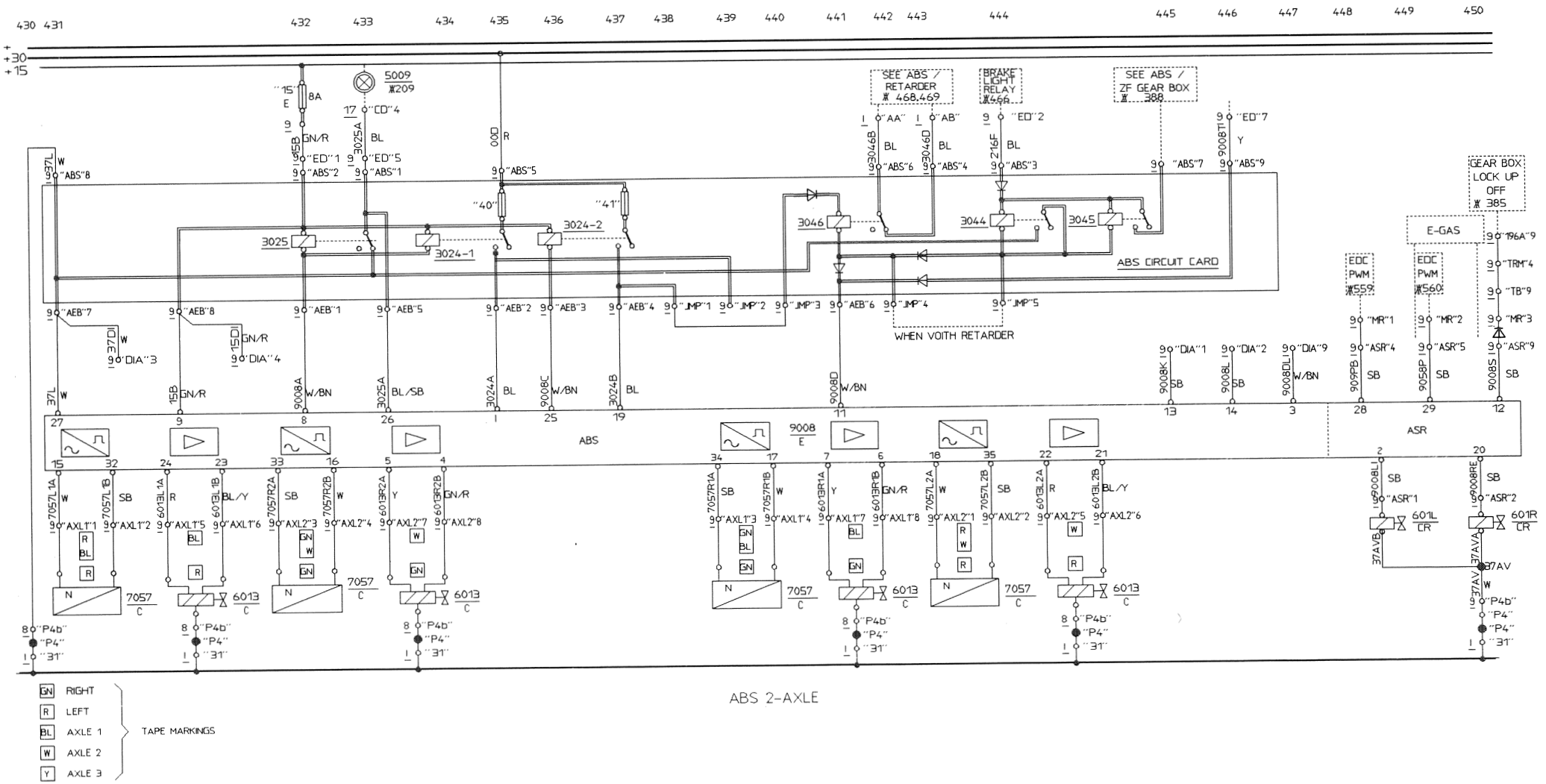

Electrical centre, connectors

EA	GA	EB	**ED**	EE
EF	AT	EH	EJ	EK

CK	EL	EM	EN	EO
RET	STE	ER	EI	ET

EP	GBX	KE	KF	KH
EG		TC	KG	

(Continued from page 69)

The Anti-Slip Regulation (ASR) section of the ABS control unit monitors the speed and acceleration of the bus drive wheels and compares these values with the equivalent information from the diagonally opposite front wheels. If a difference of more than 4 km/h is detected, the appropiate solenoid valve (601L or 601R) is energized to brake the drive wheel with the highest rotation speed, enough to reduce its speed so that it slows down to the same speed as the other drive wheel.

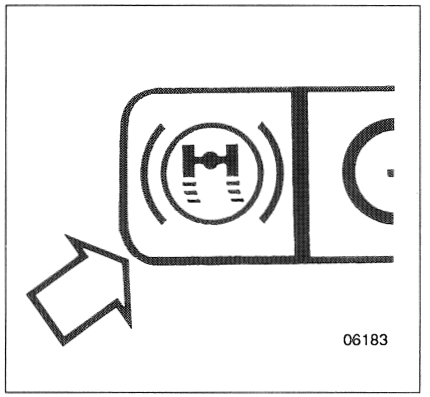

5009 ABS indicator lamp

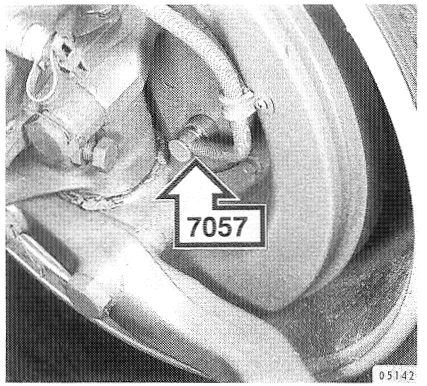

7057 Road wheel rotation ABS sender

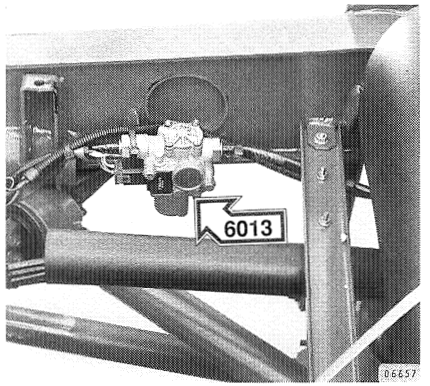

6013 Wheel brake ABS solenoid valve (B10B)

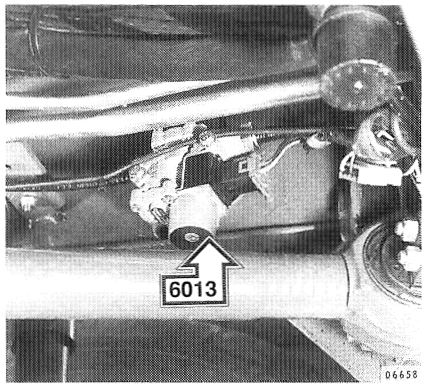

6013 Wheel brake ABS solenoid valve (B12)

22 Reversing lights, brake lights, ABS gearbox/retarder interface

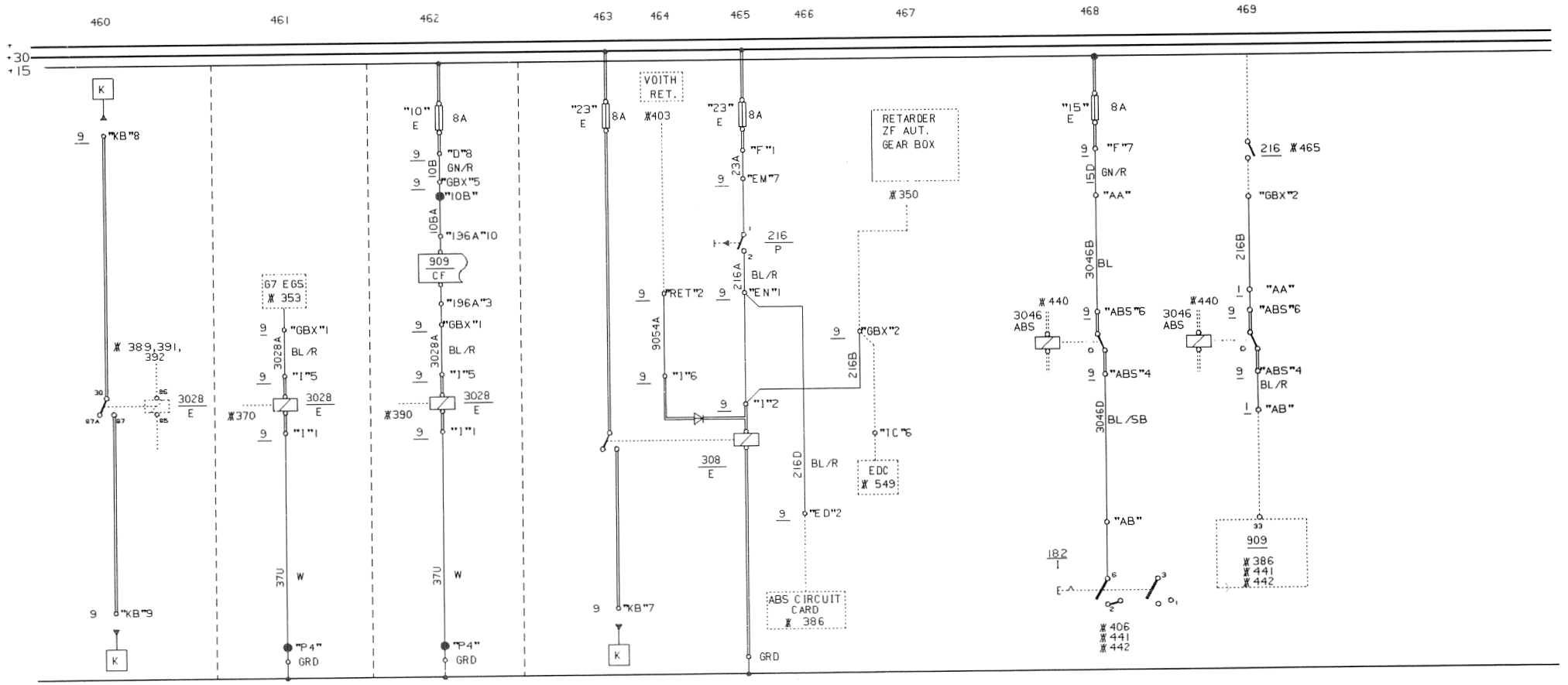

Reversing lights

G7 EGS

ZF automatic

Brake lights

ABS gearbox/retarder interface

Voith retarder ZF HP 500/590/600

Electrical centre, connectors

EA	GA	**EB**	**ED**	EE
EF	AT	EH	EJ	EK

CK	EL	**EM**	**EN**	EO
RET	STE	ER	EI	ET

EP	**GBX**	KE	KF	KH
EG		TC	KG	

Fuse	Rating	Circuit protected by fuse
"10"	8A	ZF Transmission system reversing lights relay
"15"	8A	Voith hydraulic braking retarder system
"23"	8A	Brake lights

No.	Component
182	Retarder switch
216	Brake lights closing contact
308	Brake lights relay
909	ZF HP transmission control unit
3028	Reversing lights relay
3046	Retarder inhibit relay

Circuit descriptions

Reversing lights

The reversing lights, wired on the body from KB8 and KB9, are relay-controlled from relay (3028), which is energized by closing contacts on the transmission or gear selector. Each transmission system has its own method of energizing relay (3028), with its closing contact either grounding the relay or applying voltage to it. On buses with automatic transmissions, relay (3028) must be energized when reverse gear is selected by the transmission.

Brake lights

The brake lights are controlled by the contact of relay (308), which applies voltage to the body-mounted brake lights via KB7 when the contact (216) closes due to brake pressure being applied, or alternatively when the Voith hydraulic or the built-in ZF automatic transmission retarder system signals that retardation is being applied.

ABS/retarder interface

These circuits have been introduced so that the retarder and/or automatic transmission retarding functions do not adversely affect the ABS system when it is in operation. The circuits are disconnected by the appropriate ABS relay (3046) when ABS braking comes into effect.

When the ABS system is working, i.e. generating pulses for the wheel brakes, terminal 11 on control unit (9008) is negative (see Schematic 21). This energizes relay (3046), which switches out the retarder, if fitted.

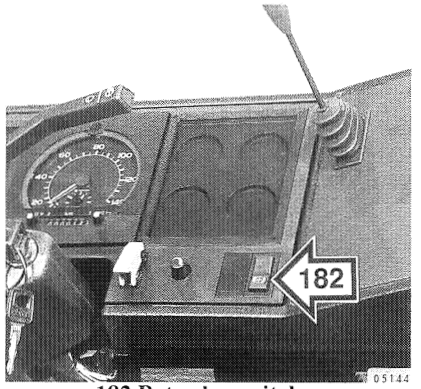

182 Retarder switch

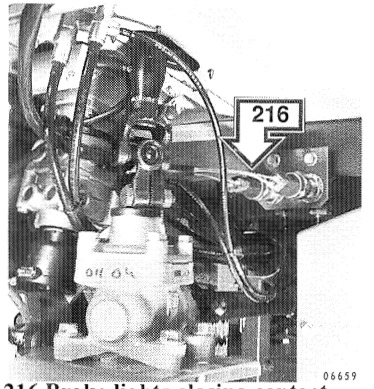

216 Brake lights closing contact

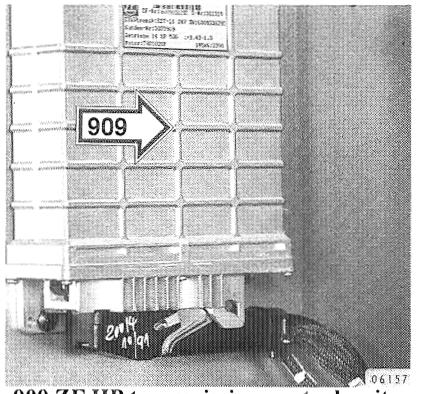

909 ZF HP transmission control unit

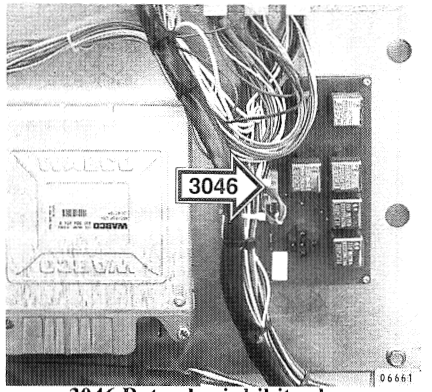

3046 Retarder inhibit relay

23 Level control and kneeling systems (Sheet 1 of 2)

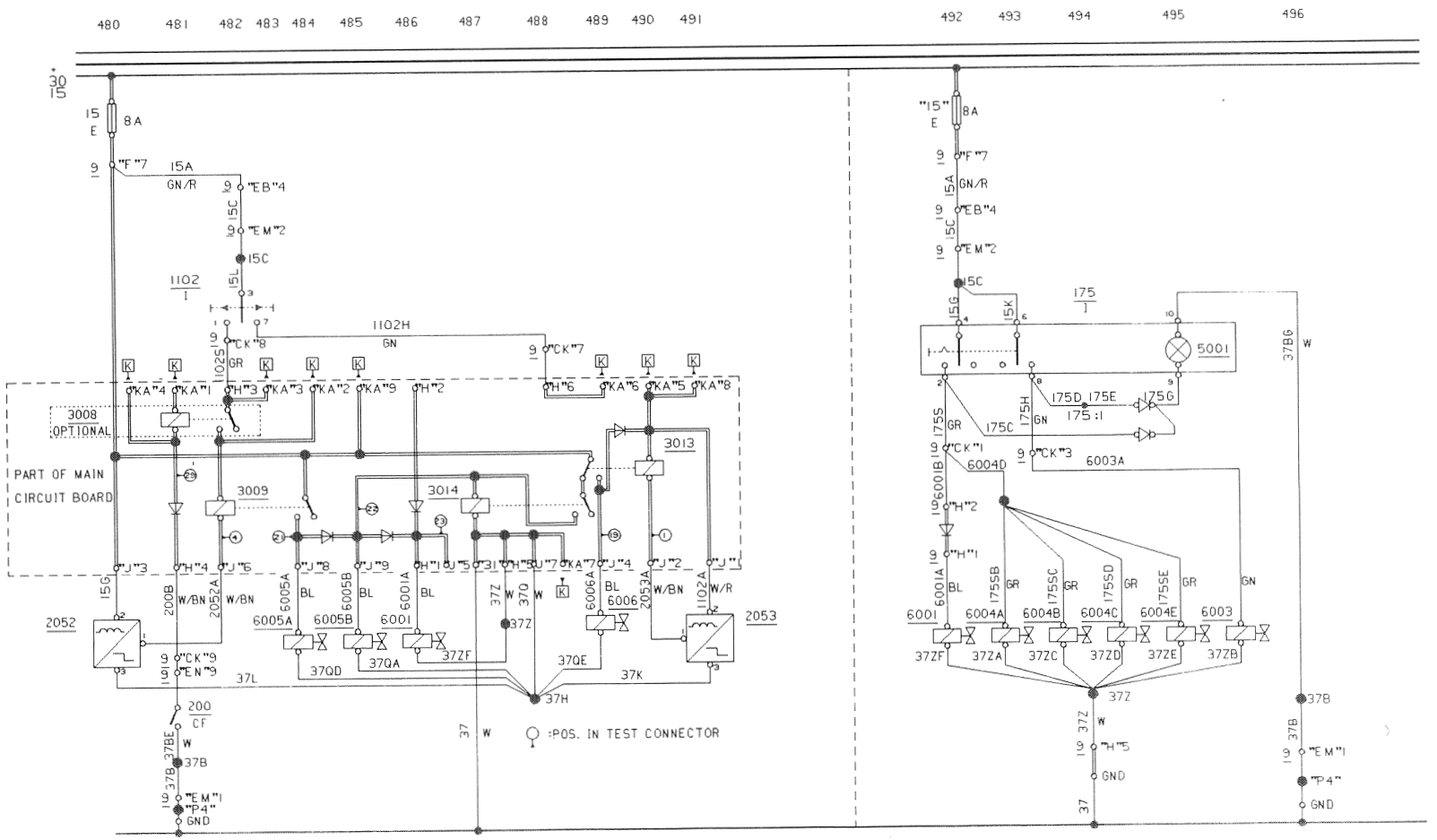

Kneeling circuit

Level control

Electrical centre, connectors

EA	GA	**EB**	ED	EE
EF	AT	EH	EJ	EK

CK	EL	**EM**	**EN**	EO
RET	STE	ER	EI	ET

EP	GBX	KE	KF	KH
EG		TC	KG	

Fuse	Rating	Circuit protected by fuse
"15"	8A	Level control and kneeling systems

No.	Component
175	Level control switch
200	Parking brake pressure switch
903	Diode
1102	Kneeling switch
2052	Kneeling low level inductive switch
2053	Kneeling high level inductive switch
3008	Kneeling inhibit relay (optional)
3009	Kneeling down relay
3013	Kneeling up relay
3014	Kneeling down holding relay
5001	Lamp in level control switch (175)
6001	Air shut-off solenoid valve
6003	Level control raise solenoid valve
6004A	Level control front lowering solenoid valve
6004B	Level control rear lowering solenoid valve
6004C	Level control rear lowering solenoid valve
6004E	Level control lowering solenoid valve
6005A	Kneeling front air release solenoid valve
6005B	Kneeling bellows air blocking solenoid valve
6006	Kneeling raise solenoid valve

Circuit description

When the kneeling switch (1102) is activated, the positive supply is connected to H3 (current path 482) and body connector KA3, to which the body builder may add circuits to determine whether kneeling may be inhibited under certain conditions. Optional relay (3008) is controlled from body circuits via KA1 and will inhibit kneeling if it is de-energized. This relay obtains its ground connection either via body connector KA4 or the parking brake pressure switch (200), so that if the parking brake has been set on, the relay will be energized, permitting kneeling to take place.

It is often required that kneeling will be permitted when the parking brake is set on and the engine is running. These conditions will allow relay (3008) to be energized if body connector terminals KA1 and KB4 are linked together.

If kneeling down is selected, relay (3009) will be energized, as it is grounded via low level inductive switch (2052) until the bus reaches its lowest level. (2052) then breaks the connection to (3009), which thus remains energized until kneeling down is completed.

(Continued on page 77)

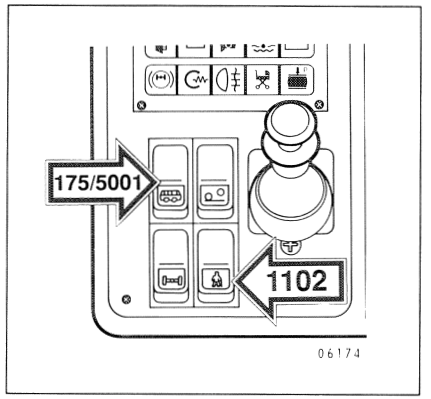

Instrument panel switches and lamp

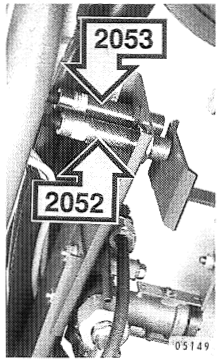

2052, 2053 Kneeling low/high level inductive switches

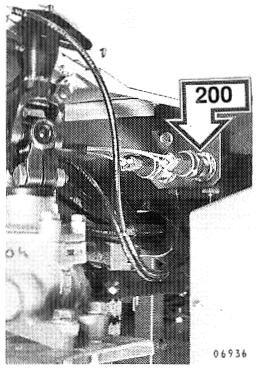

200 Parking brake pressure switch

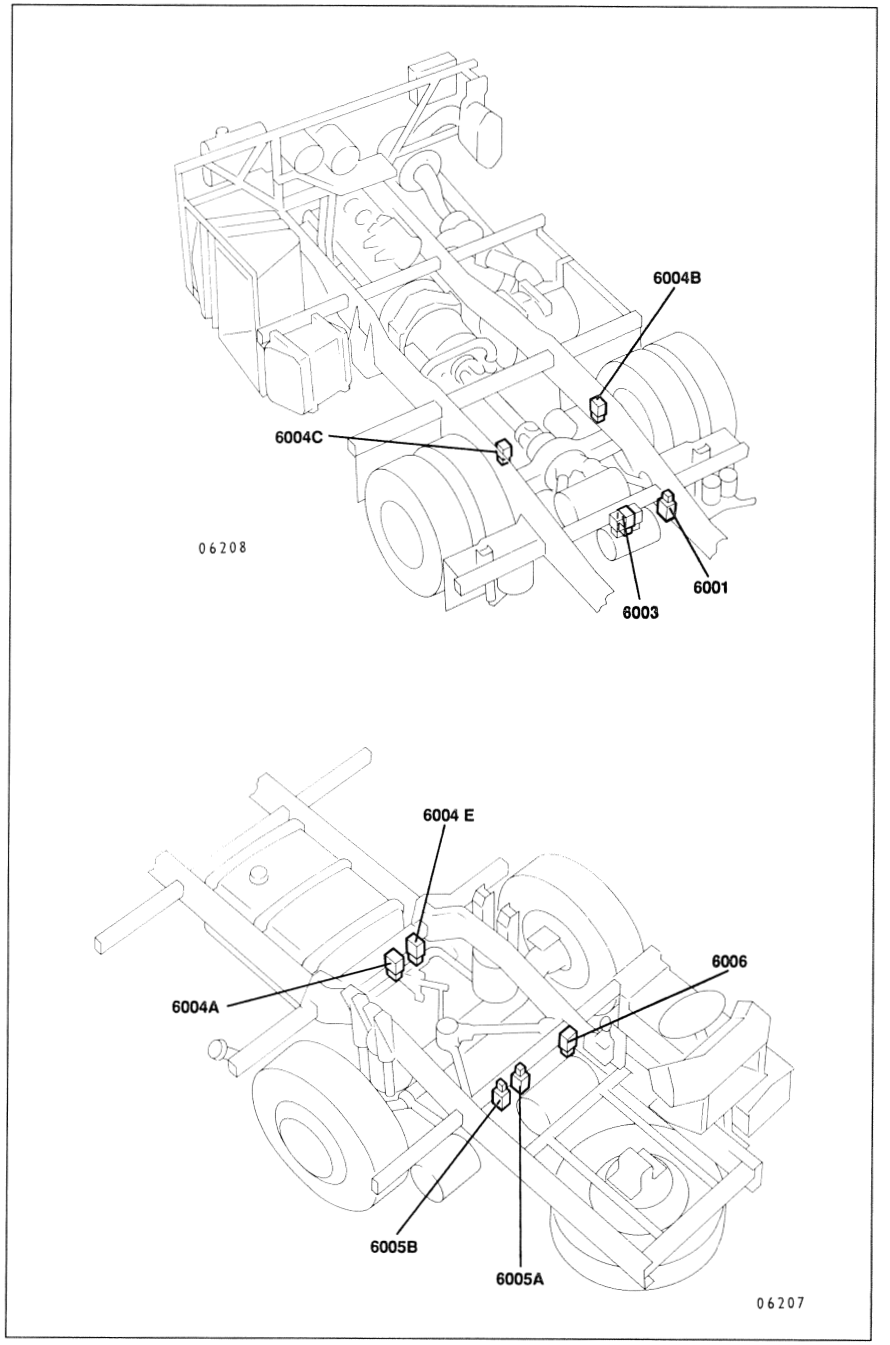

Solenoid valve locations (similar locations on both B10B and B12 chassis)

23 Level control and kneeling systems (Sheet 2 of 2)

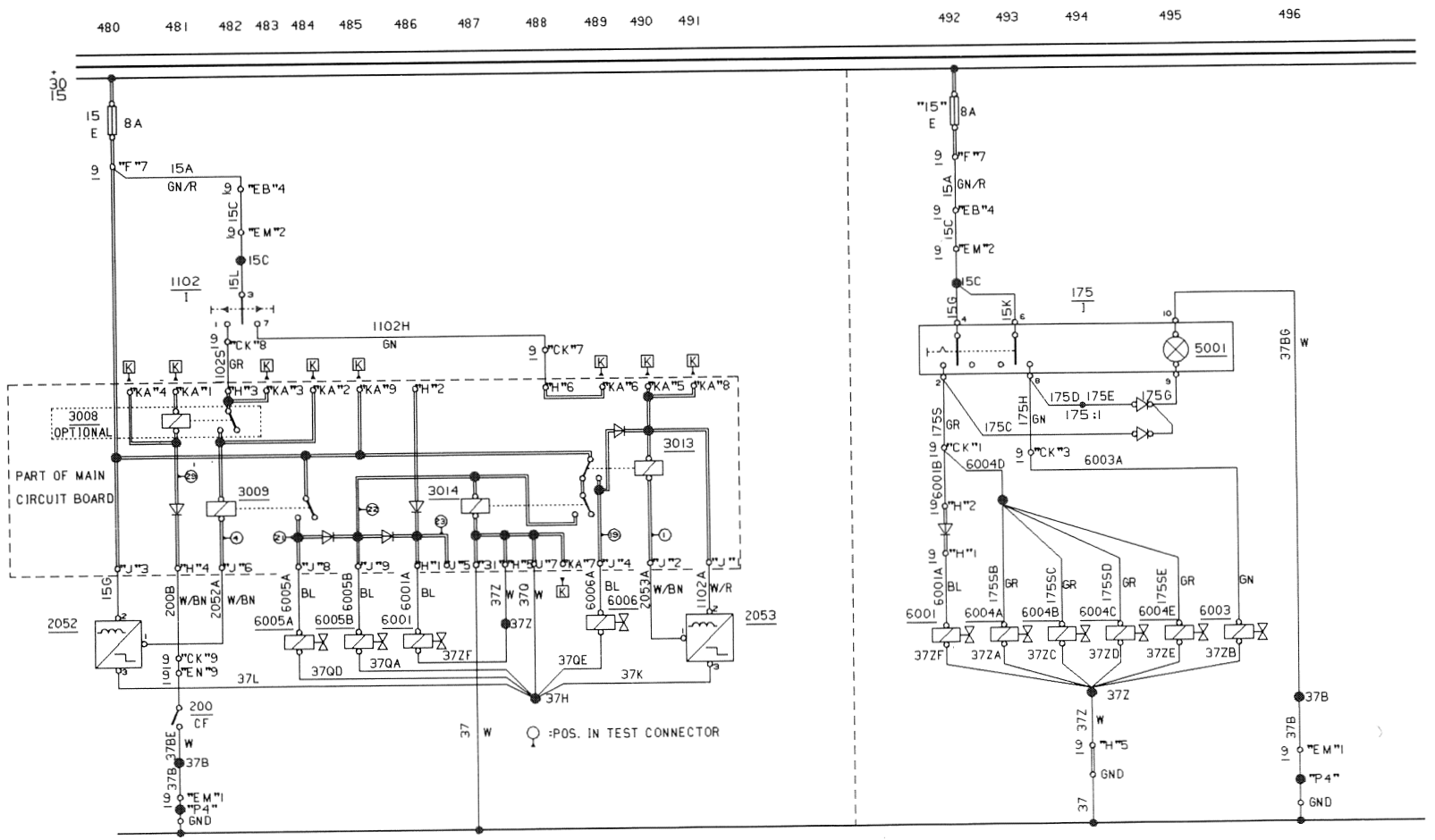

Kneeling circuit

Level control

Electrical centre, connectors

EA	GA	EB	ED	EE
EF	AT	EH	EJ	EK

CK	EL	EM	EN	EO
RET	STE	ER	EI	ET

EP	GBX	KE	KF	KH
EG		TC	KG	

(Continued from page 75)

The kneeling down relay (3009) connects the positive supply from fuse "15" to energize solenoid valves (6001), 6005A) and (6005B), and also holding relay (3014). Relay (3014) contact closes to keep itself and the solenoid valves energized during kneeling down. (6001) prevents loss of air from the suspension during kneeling down; (6005A) releases air from the appropriate side of the front air suspension bellows; and (6005B) closes the connection between the right and left sections of the front air suspension

When kneeling up is selected by switch (1102) the positive supply is connected to H6 and passes via body-mounted circuits between KA6 and KA5/8 to energize the kneeling up relay (3013) and the kneeling high level inductive switch (2053). The body-mounted circuits will inhibit kneeling up under certain conditions. Inductive switch (2053) provides a ground connection to relay (3013) until the bus reaches normal driving height. The energized contact of relay (3013) removes the positive supply from relay (3014) and solenoid valves (6001), (6005A) and (6005B). Instead it connects the positive supply to solenoid valve (6006), which raises the bus until switch (2053) de-energizes relay (3013) at normal height. The diode between relay (3013) coil and its energized contact keeps this relay energized even if switch (1102) is released, to ensure that kneeling up continues to completion.

Level control

The level control system, using switch (175), lowers the height of the whole bus by operation of the four solenoid valves (6004A/B/C/E) to release air from the suspension bellows. Valve (6001) isolates the rest of the compressed air system when level control is in progress. When raising or lowering the bus the lamp (5001) in current path 495 will light.

Valve (6004E) is only fitted to versions supplied to the United Kingdom.

Raising is performed by switching (175) to its other position, energizing valve (6003) to admit air to the suspension bellows instead.

24 Electronic Diesel Control (EDC) (Sheet 1 of 2)

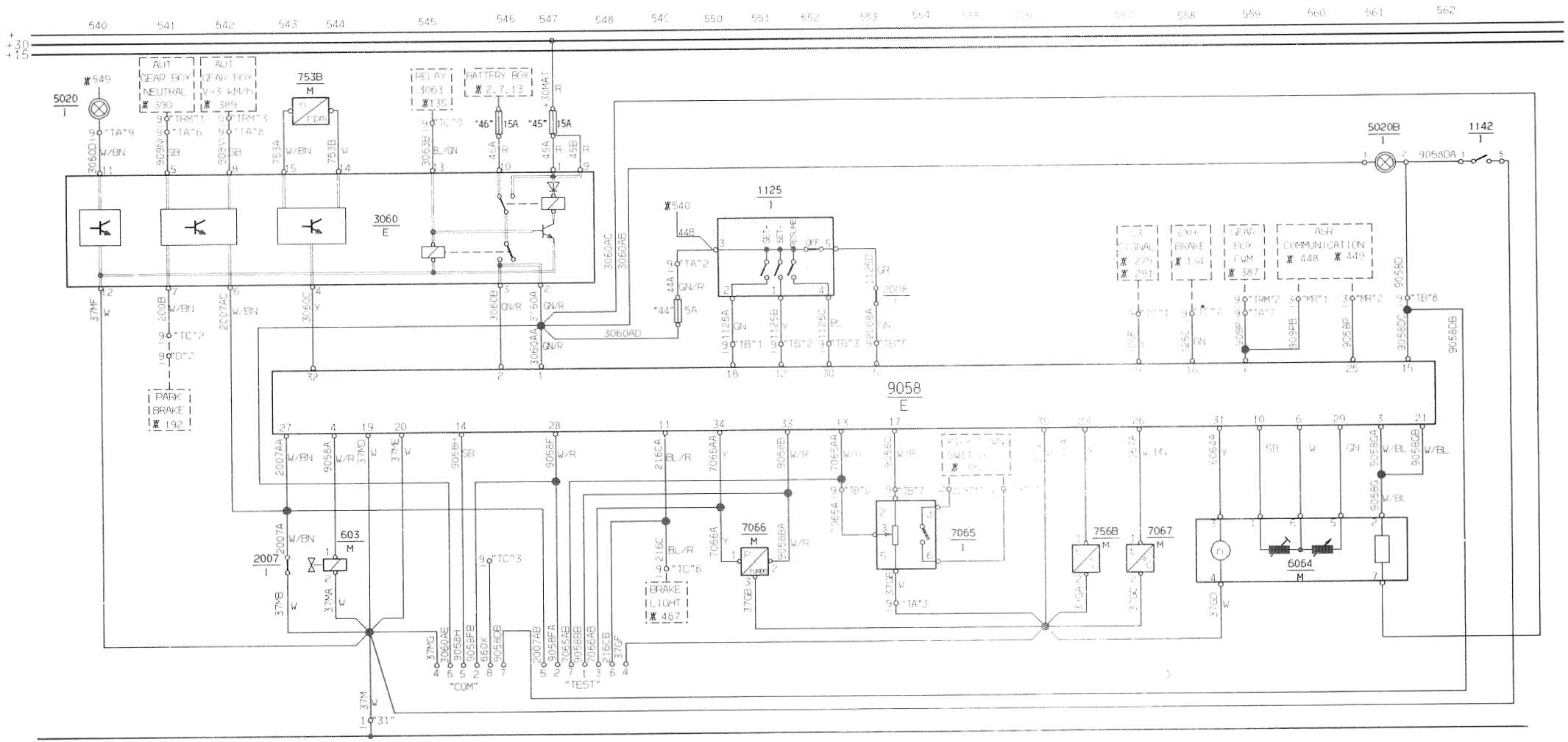

Electrical centre, connectors

EA	GA	EB	ED	EE
EF	AT	EH	EJ	EK

CK	EL	EM	EN	EO
RET	STE	ER	EI	ET

EP	GBX	KE	KF	KH
EG		TC	KG	

Fuse	Rating	Circuit protected by fuse
"44"	5A	EDC control and EDC back-up power supply warning lamp
"45"	15A	EDC system
"46"	15A	EDC back-up power (location not shown)

No.	Component
603	Engine stop solenoid valve
753B	EDC engine speed sender
756B	Coolant temperature sender
1125	EDC control (constant speed control)
1142	EDC diagnostic switch (may be marked 1131)
2007	Clutch pedal switch
2008	Brake pressure switch
3060	EDC relay box
5020	EDC backup power supply warning lamp
5020B	EDC diagnostic lamp
6064	Fuel injection pump governor
7065	EDC accelerator pedal position sender
7066	Charge air cooler pressure sender
7067	Charge air cooler temperature sender
9058	EDC control unit
"COM"	EDC communication connector
"TEST"	EDC test connector

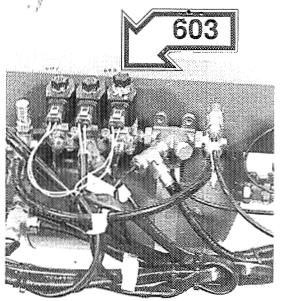

06934

603 Engine stop solenoid valve

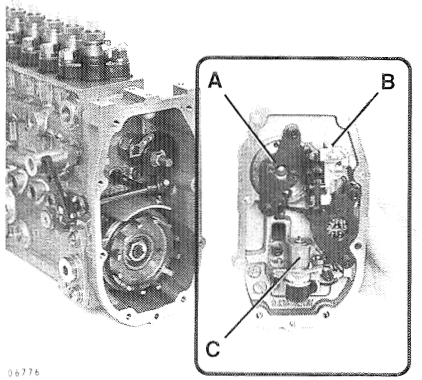

06776

6064 Regulator

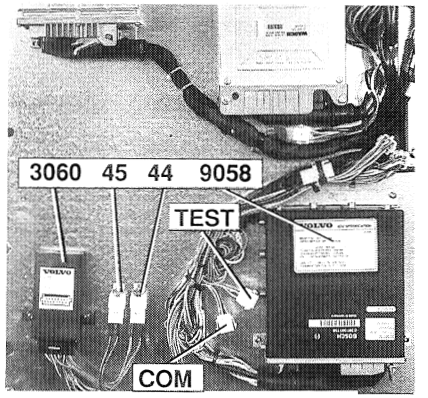

06779

3060 EDC relay box, fuses and connectors
9058 EDC control unit

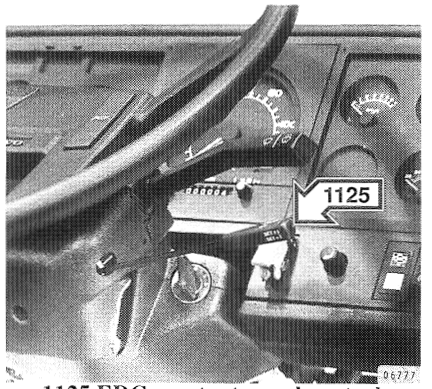

06777

1125 EDC constant speed control

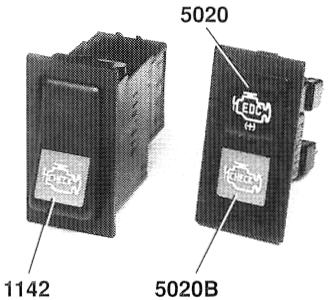

06780

1142 EDC diagnostic switch
5020, 5020B Warning lamps

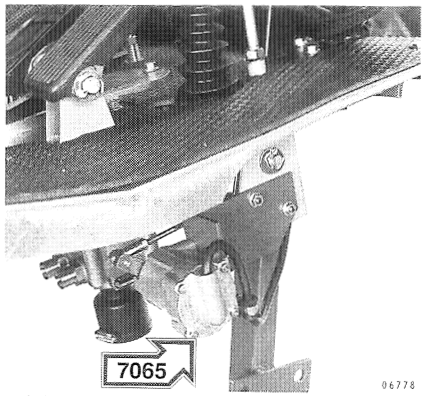

06778

7065 Accelerator pedal position sender

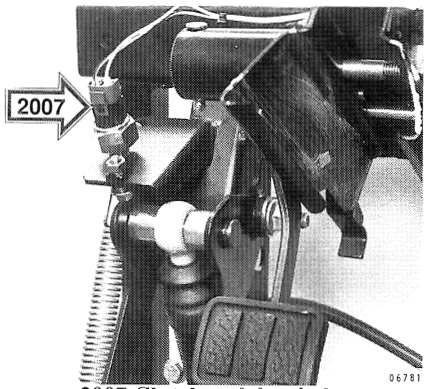

06781

2007 Clutch pedal switch

Circuit description - General

The EDC system controls the amount of fuel injected into the engine by means of an electromagnetic actuator (A) in the fuel injection pump governor (6064). The governor also contains a built-in speed sender (C) and a position sensor (B), which informs the system of the current control rod position. The actuator is controlled by the control unit (9058). The relay box (3060) contains components for supplying the EDC system voltages, evaluating the engine speed signal from the sender (753B) located in the transmission housing and for simulating the released clutch pedal on buses with automatic transmissions.
Constant road speed and constant engine speed values are set and maintained within certain limits by the EDC control (1125) on the steering column. This control is protected by 5A fuse "44" located in the rear electrical centre. The EDC system is supplied via a 15A fuse "45". Backup power, indicated by warning lamp (5020), is provided by fuse "46" located in the rear electrical centre. The system includes a diagnostic switch (1142) and lamp for fault diagnosis. The EDC system can communicate with an ASR if necessary.
The "TEST" connector provides values at measurement points for service and/or repair.
The "COM" connector is used for programming the control unit.

Programming

During chassis assembly each individual control unit is pre-programmed with engine data, constant speed requirements etc. The programmed values are listed on a label attached to the outside of the control unit. The chassis number on the label must agree with the bus chassis number.

Continued on page 81

24 Electronic Diesel Control (EDC) (Sheet 2 of 2)

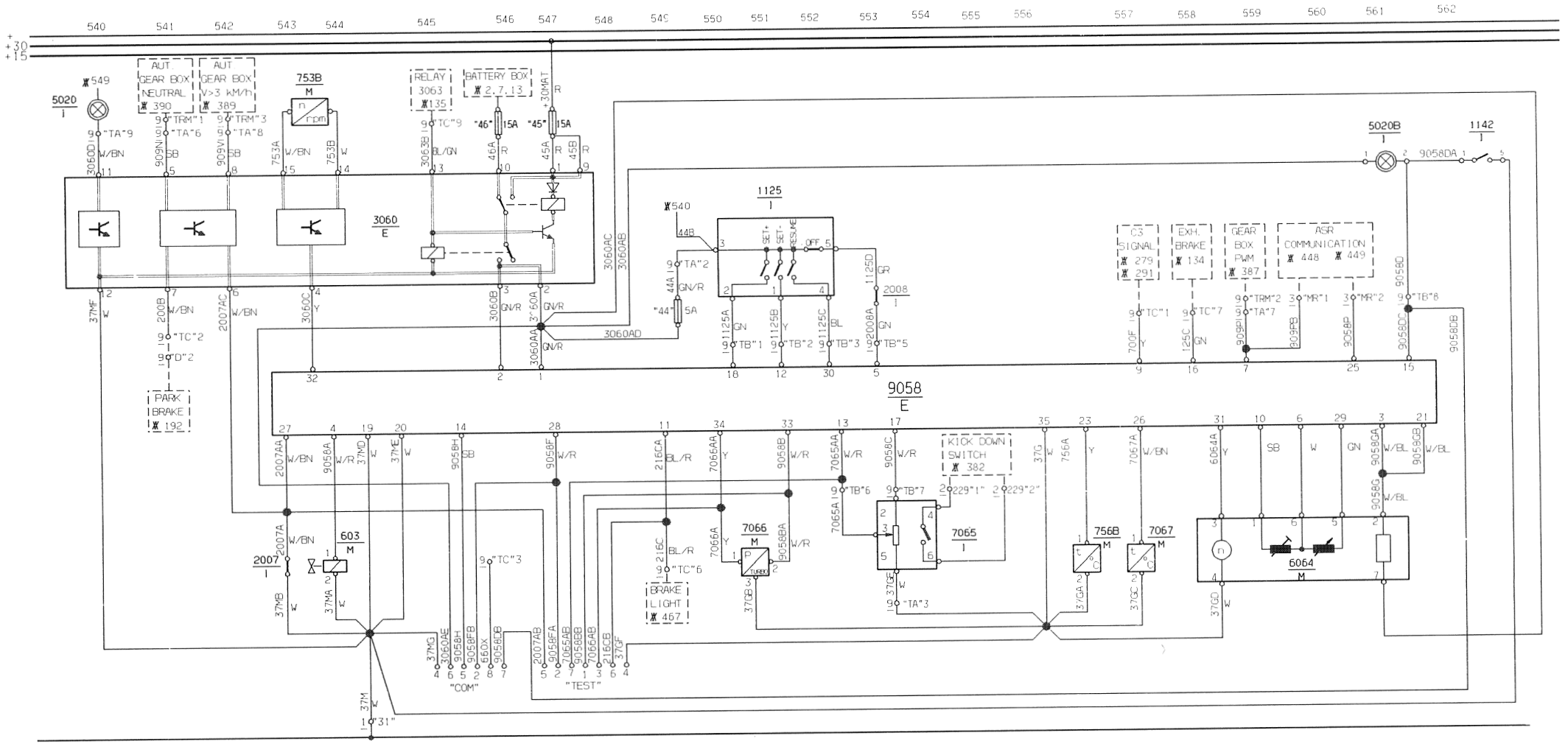

Electrical centre, connectors

EA	GA	EB	ED	EE
EF	AT	EH	EJ	EK

CK	EL	EM	EN	EO
RET	STE	ER	EI	ET

EP	GBX	KE	KF	KH
EG		TC	KG	

Continued from page 79

Communication with the control unit (9058)

The left hand column shows the relevant pin number in the control box connector.

32	Speed signal from relay box
2, 1	Power supply connections
18,12,30,5	Signals from the steering column constant speed control switch (1125) via brake pressure switch (2008) that opens the circuit when braking.
9	C3 signal from speedometer or tachograph
16	Voltage from exhaust brake when activated (switches off constant speed function)
7	Pulse-width-modulated (PWM) accelerator posn. signal to automatic transmission and ASR system
25	Signal from ASR for accelerator reduction when wheel-slip detected
15	Output pulses to diagnostic lamp
21, 3	Accelerator control signal to governor actuator (6064)
6, 29, 10	Control rod position signal from sensor (6064)
31	Speed signal from governor sender (6064)
26	Charge air cooler temperature from sensor (7067) in inlet hose
23	Engine coolant temperature signal from sender (756B). B10B - located in thermostat housing lid. B12 - located in return pipe from engine (to retarder).
35	Sensor ground
17, 13	Accelerator pedal position from position sensing potentiometer (7065). Kick-down switch for automatic transmissions is built in to position sensor in EDC system.
33, 34	Signal from charge air cooler pressure sender (7066), located in upper edge of rear engine door, but may be re-positioned by body builder. B10B shown.
11	Voltage from brake light circuit when activated (switches off constant speed function)
28	Fuel injector control rod position signal
14	Programming input
20, 19	Chassis ground connection
4	Duplicate engine stop (apart from removing current from governor actuator) by means of solenoid valve (603) and compressed air cylinder that mechanically operates control rod via lever on fuel injection pump.
27	Clutch pedal switch (2007) input, grounded when clutch pedal released (on manual gearboxes; for automatic transmission see pin 6 below).

Communication with the relay box (3060)

The left hand column shows the relevant pin number in the relay box connector.

11	Grounded when backup power is supplied (and thereby lights warning lamp (5020))
5	Automatic transmission in neutral signal
8	Speed signal from automatic transmission
15, 14	Speed signal from sensor (753B) in transmission housing. The other speed sensor in the housing is for the rev. counter and has no connection with the EDC system.
13	Voltage from relay (3063) signalling that the keyswitch or feed switch is in the "drive" position
10	Backup power supply input from fuse "46"
1, 9	Power supply inputs from fuse "45"
2, 3	Power supply to control unit
4	Engine speed signal to control unit
6	Ground signal to control unit pin 27. For auto. transmission, when bus is stationary simulates "clutch released", "parking brake on" and "neutral". During slow driving signal simulated by speed signal from transmission, available from 3 km/h.
7	Parking brake applied signal input
12	Chassis ground connection

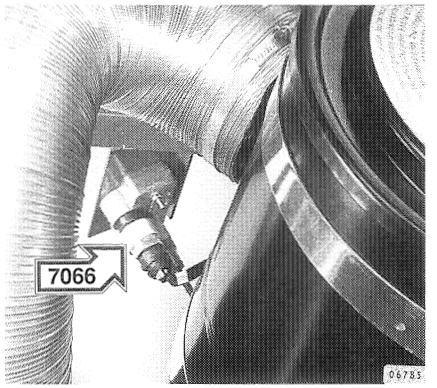

7066 Charge air cooler pressure sender

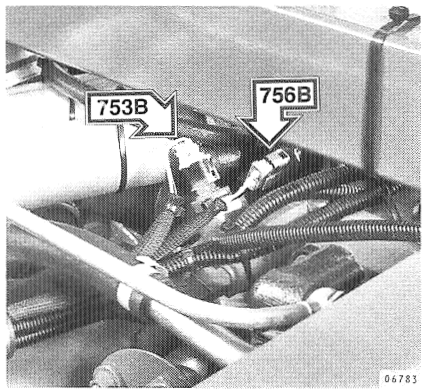

753B Engine speed sender
756B Coolant temperature sender

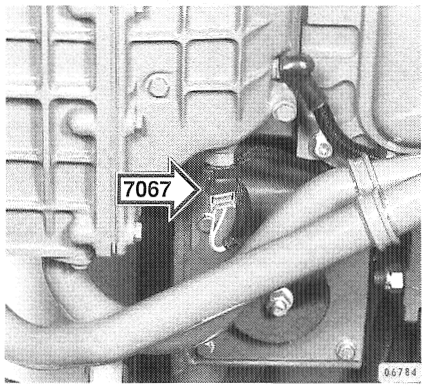

7067 Charge air cooler temp. sender

B10B

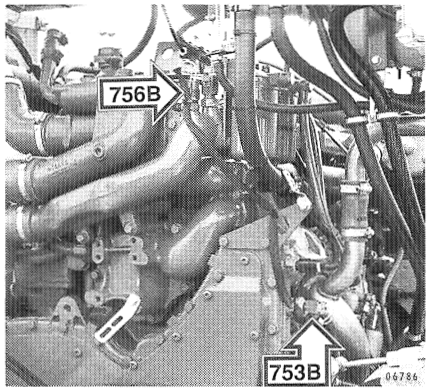

753B Engine speed sender
756B Coolant temperature sender

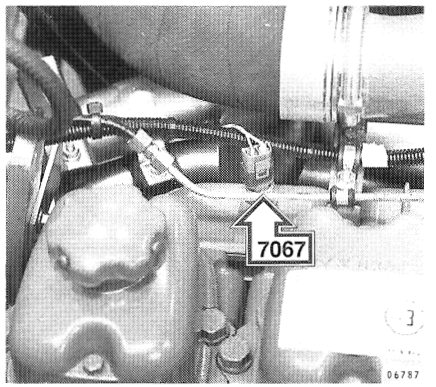

7067 Charge air cooler temp. sender

B12

25 Electrical accelerator

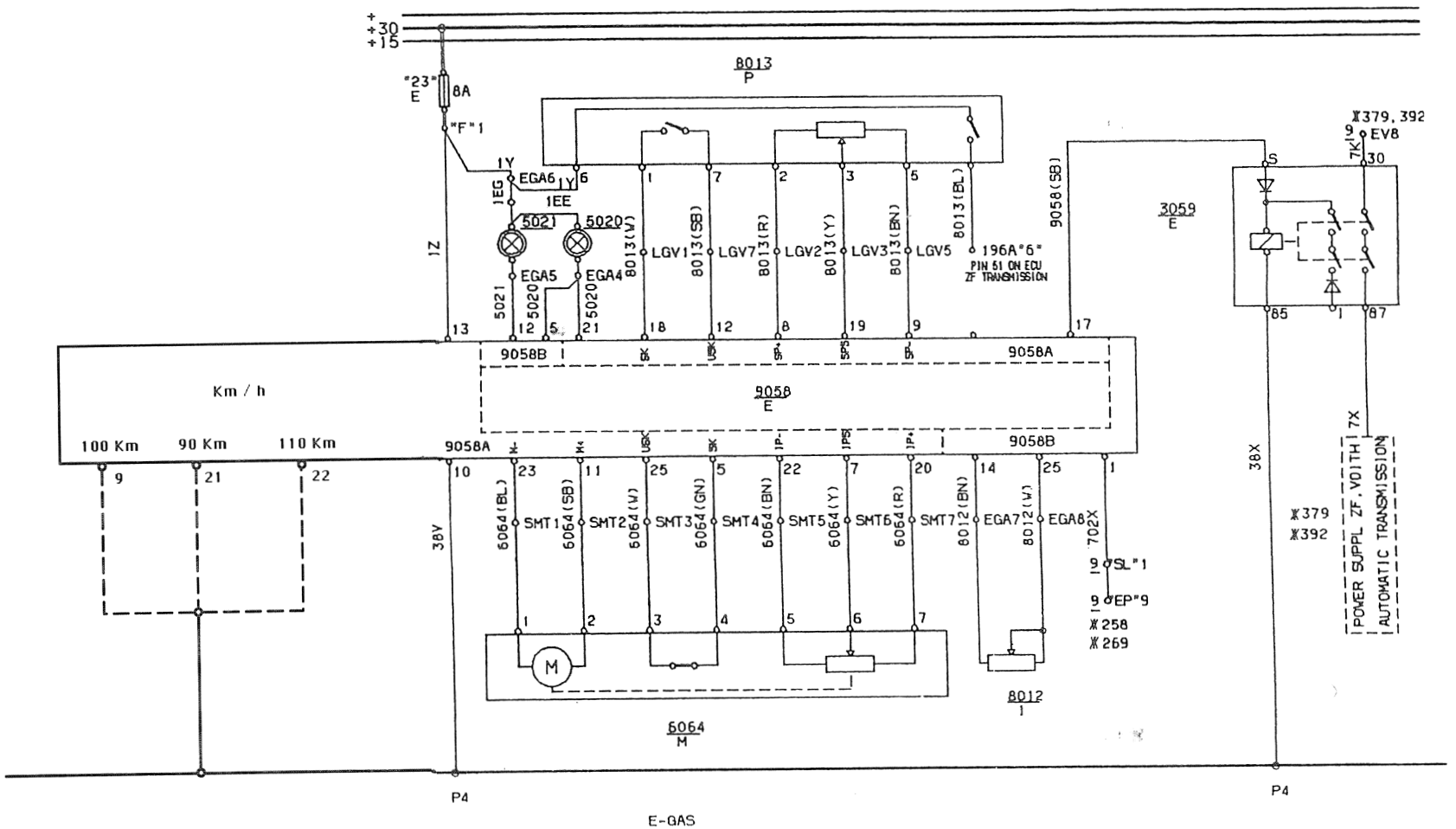

E-GAS

Electrical centre, connectors

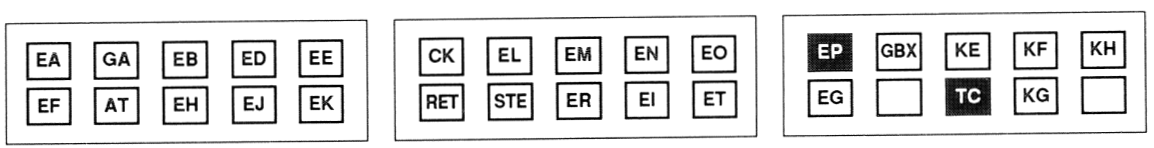

Fuse	Rating	Circuit protected by fuse
"23"	8A	Electrical controlled accelerator system

No.	Component
3059	Electrically controlled accelerator safety relay
5020	Warning lamp (red), fault in electrically controlled accelerator
5021	Warning lamp (yellow), hand throttle engaged
6064	Electrically controlled accelerator actuator
8012	Electrically controlled accelerator hand throttle potentiometer
8013	Accelerator pedal position sender
9058	Electrically controlled accelerator electronic control unit

Circuit description

Sender (8013) transmits the position of the accelerator pedal to the control unit (9058) which then positions the accelerator arm by means of an actuator (6064), with feedback to the control circuit from a potentiometer mounted on the actuator. For speed limiting, the speed signal is received by the control unit (9058) terminal 1 from the speedometer or tachograph (see Schematic 12).

Relay (3059) is only fitted on buses with ZF automatic transmissions; it has no function in buses with manual gearboxes.

If the hand throttle (8012) is engaged, warning lamp (5021) is lit on the instrument panel.

In case of a fault in the electrical accelerator system, relay (3059) will be energized by the control unit (9058) and switch the automatic transmission to neutral. The red warning lamp (5020) on the instrument panel will also be lit.

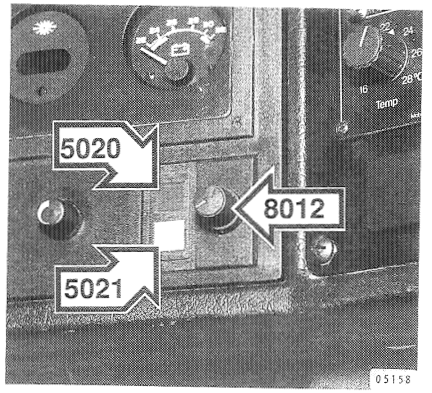

Instrument panel components

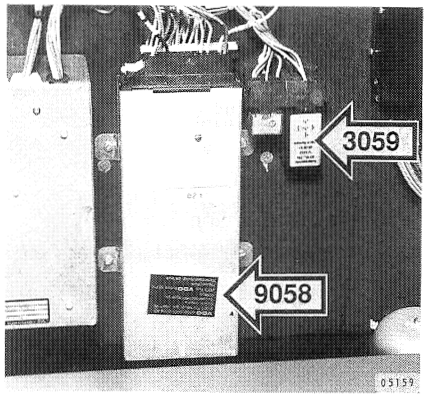

3059 Safety relay
9058 El. accelerator control unit

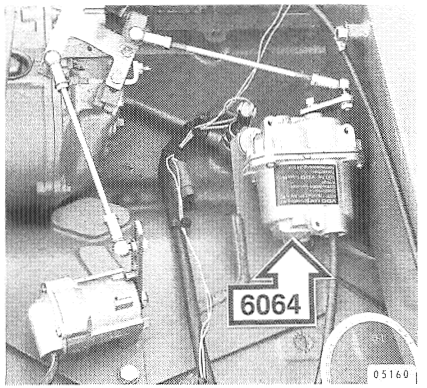

6064 Actuator

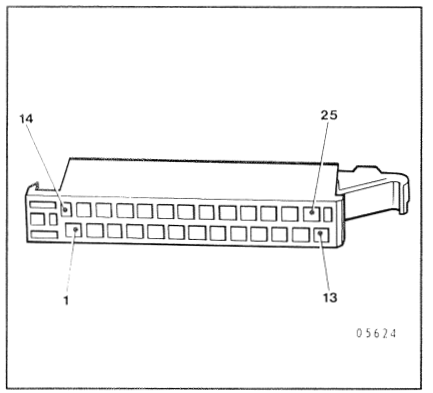

9058 Control unit connections

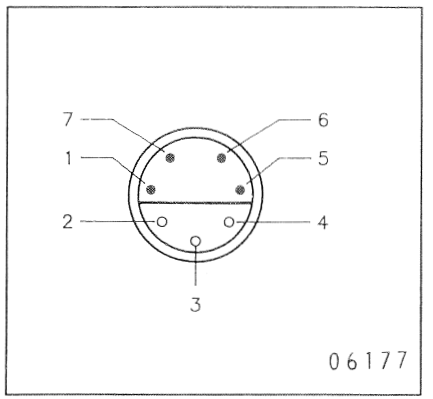

6064 Actuator connections

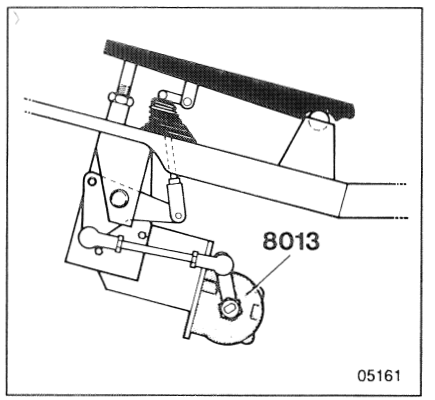

8013 Accelerator pedal position sender

Component number index

No.	Component name	Schematic diagram(s)	Current path(s)	Location shown on page(s)
1	Jumper	3	8	–
30	Battery	3	1, 3, 9	19
85	Fast charging socket	3	1, 4, 10	19
100	Lighting switch	5	63	23
101/109/ 147	High/low beam sw., hazard warning lights and direction indicators switch	4, 5, 15	41, 72, 302	21, 23, 53
119/120	Windscreen wash/wipe switch	15	308	53
125	Exhaust brake switch	8	134	31
126	Differential lock switch	17	326	57
133	Bogie switch	17	327	57
144	Battery master switch	3, 8	8, 14, 139	19, 31
149/223	Horn switches/ring	15	305	53
150	Keystart switch	5	58	23
153	Cold start button	7	111	29
160	Engine stop button	4	25	21
172	"Limp-home" switch and lamp	18	370	59
175	Level control switch	23	494	75
180	Emergency cut-out switch	3, 8	14, 139	19, 31
182	Retarder switch	19, 20, 22	383, 406, 468	63, 67, 73
185	Engine start button	4	24	21
185B	Engine start switch in rear el. centre	6	87	27
186	Engine start enable sw., rear el. centre	6	88	27
196	ZF gear selector switches	6, 19	101, 388	27, 63
199	Feed switch	4	30	21
200	Parking brake pressure switch	11, 23	192, 481	41, 75
202	Engine oil pressure low contact	13	250	47, 49
207	Diff. lock ind. lamp closing contact	17	326	57
216	Brake lights closing contact	19, 22	383, 465, 469	63, 73
229	Kick-down switch	19	382	63
254	Engine compt. thermal break contacts	16	322	55
300	Headlamps relay	4, 5	32, 40, 62, 71	5
308	Brake lights relay	22	465	73
309	Parking lights relay	4, 5, 10	31, 34, 63, 65, 186	5
312	Starting heater relay	7	111	29
315	Starting switch relay	4, 5, 6	24, 54, 91	5
315B	Starter solenoid control relay	6	88	27
318	Exhaust gas pressure regulator relay	7	120	5
333	Engine preheating timer relay	7	117	4
342A	Electrical battery master switch	3	5, 10	19
342B	Starter motor circuit breaker	6	80	27
345	Start inhibit relay	6	94	5
345B	External start inhibit relay	6	88	27
354A	Starting position relay	6	92	5
354B	Auxiliary starting position relay	6	97	4, 27
381	Retarder indicator lamp relay	20	401	5
389	Starting heater indicator lamp relay	7	114	5
396	Transm. start position (neutral) relay	6, 19	101, 102, 391	5
399A	EGS safety neutral relay	18	359	59
399B	EGS control unit feed relay	18	356	59
431	Instrument panel lamps	10	183-188	—
500	Direction indicators indicator lamp	11	214	39
503	Engine oil pressure low warning lamp	11, 13	198, 250	39, 47, 49
504	High beam indicator lamp	4, 5, 11	36, 67, 212	23, 39
505	Alternator 1 charging warning lamp	9, 11	152, 157, 160, 197	39
506	Alternator 2 charging warning lamp	9, 11	154, 203	39
507	Brake pressure low warning lamp	11, 12	196, 237, 239	39
508	Parking brake off warning lamp	10, 11	182, 192	35, 39
526	Retarder indicator lamp	11, 19, 20	210, 380, 400	39, 63, 67
528	Starting heater indicator lamp	7, 11	114, 217	29, 39
536	Rear fog lights indicator lamp	11	216	39
540	Engine oil level low warning lamp	11	201	39

No.	Component name	Schematic diagram(s)	Current path(s)	Location shown on page(s)
541	Transmission temperature high/ EGS diagnostics and safety system warning lamp	11, 13	204, 253	39
542	Door brake warning lamp	11	193	39
543	Eng. compt./luggage doors open warning lamp	11	207	39
544	Eng. compt. temp. high warning lamp	11, 16	195, 320	39, 55
545	Next stop indicator lamp	11	213	39
546	Doors open warning lamp	11	202	39
547	Central warning lamps	10	172, 173	35
554	Eng. coolant temp. high warning lamp	11, 12	206, 230	39
555	Eng. coolant level low warning lamp	10, 11	170, 200	35, 39
559	Engine compt. fire warning lamp	11, 16	194, 321	39, 55
561	Perambulator warning lamp	11	208	39
562	Air susp. press. low warning lamp	11	215	39
600	Exhaust braking sol. valve (B12 only)	7	124	29
601	Differential lock solenoid valve	17	325	57
601L	Anti-slip solenoid valve, left	21	449	—
601R	Anti-slip solenoid valve, right	21	450	—
603	Engine stop solenoid valve	8, 24	136, 544	31, 79
626	Exh. gas pressure regulator sol. valve	7	122, 123	29
648A	Bogie solenoid valve	17	327	57
648B	Auxiliary bogie solenoid valve	17	328	57
654	Starter motor	6	83	27
660	Alternator	9	150, 153, 155, 158	33
700	Speedometer	14	272	51
701	Tachograph	14	285	51
702	Combi 1 instruments	12	240	43, 45
703	Engine rpm gauge	12	233	43, 45
704	Service brakes air pressure gauges	12	238	43, 45
705	Engine oil pressure gauge	13	252	47, 49
706	Engine coolant temp. gauge	12	231	43, 45
707	Fuel gauge	12	232	43, 45
709	Clock/odometer	14	293	51
712	ZF transmission temperature gauge	13	255	47, 49
713	Voltmeter	13	260	47, 49
753	Engine speed sender	12	233	45
753B	EDC Engine speed sender	24	543	81
754A	Front brake circuit air pressure sender	12	238	43, 45
754B	Rear brake circuit air pressure sender	12	240	43, 45
756	Engine coolant temperature sender	7, 12	119, 231	29, 43, 45
756B	Coolant temperature sender	24	556	81
757	Fuel level sender	12	232	43, 45
759	Coolant level sender	10	171	35
762	Transm. oil temp. high sender/contact	13	255	47, 49
763	Engine oil level low contact	11	201	41
800	Starting heater element	7	112	29
805	Panel lamps rheostat (dimmer)	10, 14	185, 281	35
807A	Footbrake pedal retarder switches	20	419	67
807B	Retarder hand control	20	415	67
810A	Air drier thermostatic heating element	16	323	55
810B	Air drier changeover timer	16	324	55
853	Buzzer	10	177	35
903	Diodes in electrical centre (not on printed circuit board but bundled)	3, 6, 8	6, 12, 15, 134, 136, 137, 138, 141	—
903	Diodes in instrument panel	5, 8, 23	58, 132, 495	—
906	Modulator	19	388	65
909	ZF transmission control unit	19, 22	382, 469	63, 73
1102	Kneeling switch	23	482	75
1116	Fire warning test switch	16	322	55
1121	EGS fault diagnosis check switch	18	368	59
1124	EGS gear selector microswitches	6, 18	102, 365	27, 59
1125	EDC control (constant speed control)	24	551	79

No.	Component name	Schematic diagram(s)	Current path(s)	Location shown on page(s)
1142	EDC diagnostic switch (may be marked 1131)	24	562	79
2007	Clutch pedal switch	24	543	79
2008	Brake pressure switch	24	553	81
2052	Kneeling low level inductive switch	23	480	75
2053	Kneeling high level inductive switch	23	491	75
2063	Clutch position inductive switch	18	340	61
3005	Parking brake off warning relay	10	181	5
3008	Kneeling inhibit relay	23	481	5
3009	Kneeling down relay	23	482	5
3013	Kneeling up relay	23	490	5
3014	Kneeling down holding relay	23	487	5
3024-1	ABS control unit feed 1 relay	21	434	69
3024-2	ABS control unit feed 2 relay	21	436	69
3025	ABS indicator lamp relay	21	432	69
3026A	Feed switch relay	4	22, 27	5
3026A	Keystart switch relay	5	56	5
3026B	Auxiliary feed switch relay	4	23, 28	5
3026B	Auxiliary keystart switch relay	5	58	5
3027	Fire warning lamp and buzzer relay	11, 16	194, 322	5
3028	Reversing lights relay	19, 22	390, 460, 461, 462	5
3038A	EGS start inhibit polarity sw. relay	18	352	59
3038B	EGS reversing lights polarity sw. relay	18	354	59
3041	Transmission retarder ind. lamp relay	19	380	5
3044	Auto. transm. lock-up inhibit relay	21	444	69
3045	Aux. auto. transm.lock-up inhibit relay	21	444	69
3046	Retarder inhibit relay	21, 22	441, 468, 469	69, 73
3059	El. accelerator safety relay	25	—	83
3060	EDC relay box	24	544	79
3063	Engine stop/exhaust brake relay	8	132	5
5001	Lamp in level control switch (175)	23	495	75
5009	ABS indicator lamp	11, 21	209, 433	39, 69
5020	EDC backup power supply warning lamp	24	540	79
5020B	EDC diagnostic lamp	24	562	79
6001	Air shut-off solenoid valve	23	486, 492	75
6003	Level control raise solenoid valve	23	495	75
6004A	Level control front lowering sol.valve	23	493	75
6004B	Level control rear lowering sol. valve	23	494	75
6004C	Level control rear lowering sol.valve	23	494	75
6004E	Level control lowering solenoid valve	23	495	75
6005A	Kneeling front air release sol.valve	23	484	75
6005B	Kneeling bellows air block sol.valve	23	485	75
6006	Kneeling raise solenoid valve	23	489	75
6013	Wheel brake ABS solenoid valves	21	431, 433, 441, 444	71
6018	Voith hydraulic retarder sol. valve	20	403	67
6023	Fuel cut-off solenoid valve	8	140	31
6064	Fuel injection pump governor	24	559	79
7002	Interior and ambient temp. gauge	13	257	47, 49
7005	Turbocharger pressure gauge	13	256	47, 49
7052	Transmission speed sender	14	287	—
7052B	Transmission speed sender	18	370	59
7057	Road wheel rotation ABS sender	21	431, 432, 439, 444	71
7060	Retarder temperature sender	20	404	67
7061	Engine oil pressure sender	13	252	47, 49
7063	Turbocharger pressure sender	13	256	47, 49
7064	Air suspension pressure low contact	11	215	41
7065	EDC accelerator pedal position sender	24	554	79
7066	Charge air cooler pressure sender	24	550	81
7067	Charge air cooler temperature sender	24	557	81
8012	El. accel. hand throttle potentiometer	25	—	83
8013	Accelerator pedal position sender	25	—	83
9001	Bogie air pressure sender	17	329	57

No.	Component name	Schematic diagram(s)	Current path(s)	Location shown on page(s)
9008	ABS system control unit	21	440	69
9054	Voith hydraulic retarder electrical system control unit	20	406	67
9058	EDC control unit	24	553	79
9058	El. accelerator control unit	25	—	83
9059	EGS transmission control unit	6, 18	102, 350	27, 59
9063	Fuel cut-off control unit	8	142	31
COM	EDC communication connector	24	545	79
RE1	Lamp check relay	11	219	9
RE2	Oil pressure low buzzer relay	11	198	9
TEST	EDC test connector	24	547	79

Component name index

No.	Component name	Schematic diagram(s)	Current path(s)	Location shown on page(s)
9008	ABS system control unit	21	440	69
3025	ABS indicator lamp relay	21	432	69
3024-2	ABS control unit feed 2 relay	21	436	69
3024-1	ABS control unit feed 1 relay	21	434	69
5009	ABS indicator lamp	11, 21	209, 433	39, 69
8013	Accelerator pedal position sender	25	—	83
562	Air susp. press. low warning lamp	11	215	39
7064	Air suspension pressure low contact	11	215	41
810A	Air drier thermostatic heating element	16	323	55
810B	Air drier changeover timer	16	324	55
6001	Air shut-off solenoid valve	23	486, 492	75
505	Alternator 1 charging warning lamp	9, 11	152, 157, 160, 197	39
506	Alternator 2 charging warning lamp	9, 11	154, 203	39
660	Alternator	9	150, 153, 155, 158	33
601L	Anti-slip solenoid valve, left	21	449	—
601R	Anti-slip solenoid valve, right	21	450	—
3044	Auto. transm. lock-up inhibit relay	21	444	69
3045	Aux. auto. transm.lock-up inhibit relay	21	444	69
354B	Auxiliary starting position relay	6	97	4, 27
3026B	Auxiliary feed switch relay	4	23, 28	5
3026B	Auxiliary keystart switch relay	5	58	5
648B	Auxiliary bogie solenoid valve	17	328	57
144	Battery master switch	3, 8	8, 14, 139	19, 31
30	Battery	3	1, 3, 9	19
9001	Bogie air pressure sender	17	329	57
648A	Bogie solenoid valve	17	327	57
133	Bogie switch	17	327	57
507	Brake pressure low warning lamp	11, 12	196, 237, 239	39
216	Brake lights closing contact	19, 22	383, 465, 469	63,
308	Brake lights relay	22	465	73
2008	Brake pressure switch	24	553	81
853	Buzzer	10	177	35
547	Central warning lamps	10	172, 173	35
7067	Charge air cooler temperature sender	24	557	81
7066	Charge air cooler pressure sender	24	550	81
709	Clock/odometer	14	293	51
2063	Clutch position inductive switch	18	340	61
2007	Clutch pedal switch	24	543	79
153	Cold start button	7	111	29
702	Combi 1 instruments	12	240	43, 45
759	Coolant level sender	10	171	35
756B	Coolant temperature sender	24	556	81
207	Diff. lock ind. lamp closing contact	17	326	57
601	Differential lock solenoid valve	17	325	57
126	Differential lock switch	17	326	57
903	Diodes in electrical centre (not on printed circuit board but bundled)	3, 6, 8	6, 12, 15, 134, 136, 137, 138, 141	—
903	Diodes in instrument panel	5, 8, 23	58, 132, 495	—
500	Direction indicators indicator lamp	11	214	39
542	Door brake warning lamp	11	193	39
546	Doors open warning lamp	11	202	39
7065	EDC accelerator pedal position sender	24	554	79
753B	EDC Engine speed sender	24	543	81
3060	EDC relay box	24	544	79
9058	EDC control unit	24	553	79
5020	EDC backup power supply warning lamp	24	540	79
5020B	EDC diagnostic lamp	24	562	79
1142	EDC diagnostic switch (may be marked 1131)	24	562	79
1125	EDC control (constant speed control)	24	551	79
9059	EGS transmission control unit	6, 18	102, 350	27, 59

No.	Component name	Schematic diagram(s)	Current path(s)	Location shown on page(s)
399B	EGS control unit feed relay	18	356	59
399A	EGS safety neutral relay	18	359	59
3038B	EGS reversing lights polarity sw. relay	18	354	59
3038A	EGS start inhibit polarity sw. relay	18	352	59
1124	EGS gear selector microswitches	6, 18	102, 365	27,
1121	EGS fault diagnosis check switch	18	368	59
8012	El. accel. hand throttle potentiometer	25	—	83
3059	El. accelerator safety relay	25	—	83
9058	El. accelerator control unit	25	—	83
342A	Electrical battery master switch	3	5, 10	19
180	Emergency cut-out switch	3, 8	14, 139	19, 31
555	Eng. coolant level low warning lamp	10, 11	170, 200	35, 39
554	Eng. coolant temp. high warning lamp	11, 12	206, 230	39
544	Eng. compt. temp. high warning lamp	11, 16	195, 320	39, 55
543	Eng. compt./luggage doors open warning lamp	11	207	39
763	Engine oil level low contact	11	201	41
503	Engine oil pressure low warning lamp	11, 13	198, 250	39, 47, 49
202	Engine oil pressure low contact	13	250	47, 49
753	Engine speed sender	12	233	45
705	Engine oil pressure gauge	13	252	47, 49
703	Engine rpm gauge	12	233	43, 45
706	Engine coolant temp. gauge	12	231	43, 45
7061	Engine oil pressure sender	13	252	47, 49
186	Engine start enable sw., rear el. centre	6	88	27
185B	Engine start switch in rear el. centre	6	87	27
185	Engine start button	4	24	21
3063	Engine stop/exhaust brake relay	8	132	5
559	Engine compt. fire warning lamp	11, 16	194, 321	39,
333	Engine preheating timer relay	7	117	4
603	Engine stop solenoid valve	8, 24	136, 544	31, 79
756	Engine coolant temperature sender	7, 12	119, 231	29,
540	Engine oil level low warning lamp	11	201	39
254	Engine compt. thermal break contacts	16	322	55
160	Engine stop button	4	25	21
626	Exh. gas pressure regulator sol. valve	7	122, 123	29
600	Exhaust braking sol. valve (B12 only)	7	124	29
318	Exhaust gas pressure regulator relay	7	120	5
125	Exhaust brake switch	8	134	31
345B	External start inhibit relay	6	88	27
85	Fast charging socket	3	1, 4, 10	19
199	Feed switch	4	30	21
3026A	Feed switch relay	4	22, 27	5
3027	Fire warning lamp and buzzer relay	11, 16	194, 322	5
1116	Fire warning test switch	16	322	55
807A	Footbrake pedal retarder switches	20	419	67
754A	Front brake circuit air pressure sender	12	238	43, 45
6064	Fuel injection pump governor	24	559	79
757	Fuel level sender	12	232	43, 45
9063	Fuel cut-off control unit	8	142	31
707	Fuel gauge	12	232	43, 45
6023	Fuel cut-off solenoid valve	8	140	31
300	Headlamps relay	4, 5	32, 40, 62, 71	5
504	High beam indicator lamp	4, 5, 11	36, 67, 212	23, 39
101/109/147	High/low beam sw., hazard warning lights and direction indicators switch	4, 5, 15	41, 72, 302	21, 23, 53
149/223	Horn switches/ring	15	305	53
431	Instrument panel lamps	10	183-188	—
7002	Interior and ambient temp. gauge	13	257	47, 49
1	Jumper	3	8	—
150	Keystart switch	5	58	23
3026A	Keystart switch relay	5	56	5
229	Kick-down switch	19	382	63

No.	Component name	Schematic diagram(s)	Current path(s)	Location shown on page(s)
6006	Kneeling raise solenoid valve	23	489	75
6005B	Kneeling bellows air block sol.valve	23	485	75
6005A	Kneeling front air release sol.valve	23	484	75
3014	Kneeling down holding relay	23	487	5
3013	Kneeling up relay	23	490	5
3009	Kneeling down relay	23	482	5
3008	Kneeling inhibit relay	23	481	5
2053	Kneeling high level inductive switch	23	491	75
2052	Kneeling low level inductive switch	23	480	75
1102	Kneeling switch	23	482	75
5001	Lamp in level control switch (175)	23	495	75
6004C	Level control rear lowering sol.valve	23	494	75
6004B	Level control rear lowering sol. valve	23	494	75
6004A	Level control front lowering sol.valve	23	493	75
6003	Level control raise solenoid valve	23	495	75
175	Level control switch	23	494	75
6004E	Level control lowering solenoid valve	23	495	75
100	Lighting switch	5	63	23
172	"Limp-home" switch and lamp	18	370	59
906	Modulator	19	388	65
545	Next stop indicator lamp	11	213	39
805	Panel lamps rheostat (dimmer)	10, 14	185, 281	35
508	Parking brake off warning lamp	10, 11	182, 192	35,
200	Parking brake pressure switch	11, 23	192, 481	41, 75
3005	Parking brake off warning relay	10	181	5
309	Parking lights relay	4, 5, 10	31, 34, 63, 65, 186	5
561	Perambulator warning lamp	11	208	39
754B	Rear brake circuit air pressure sender	12	240	43, 45
536	Rear fog lights indicator lamp	11	216	39
807B	Retarder hand control	20	415	67
381	Retarder indicator lamp relay	20	401	5
7060	Retarder temperature sender	20	404	67
3046	Retarder inhibit relay	21, 22	441, 468, 469	69, 73
182	Retarder switch	19, 20, 22	383, 406, 468	63, 67, 73
526	Retarder indicator lamp	11, 19, 20	210, 380, 400	39,
3028	Reversing lights relay	19, 22	390, 460, 461, 462	5
7057	Road wheel rotation ABS sender	21	431, 432, 439, 444	71
704	Service brakes air pressure gauges	12	238	43, 45
700	Speedometer	14	272	51
345	Start inhibit relay	6	94	5
654	Starter motor	6	83	27
342B	Starter motor circuit breaker	6	80	27
315B	Starter solenoid control relay	6	88	27
800	Starting heater element	7	112	29
389	Starting heater indicator lamp relay	7	114	5
354A	Starting position relay	6	92	5
315	Starting switch relay	4, 5, 6	24, 54, 91	5
312	Starting heater relay	7	111	29
528	Starting heater indicator lamp	7, 11	114, 217	29, 39
701	Tachograph	14	285	51
762	Transm. oil temp. high sender/contact	13	255	47, 49
396	Transm. start position (neutral) relay	6, 19	101, 102, 391	5
7052B	Transmission speed sender	18	370	59
7052	Transmission speed sender	14	287	—
3041	Transmission retarder ind. lamp relay	19	380	5
541	Transmission temperature high/ EGS diagnostics and safety system warning lamp	11, 13	204, 253	39
7063	Turbocharger pressure sender	13	256	47, 49
7005	Turbocharger pressure gauge	13	256	47, 49
9054	Voith hydraulic retarder electrical system control unit	20	406	67
6018	Voith hydraulic retarder sol. valve	20	403	67

No.	Component name	Schematic diagram(s)	Current path(s)	Location shown on page(s)
713	Voltmeter	13	260	47, 49
6013	Wheel brake ABS solenoid valves	21	431, 433, 441, 444	71
119/120	Windscreen wash/wipe switch	15	308	53
712	ZF transmission temperature gauge	13	255	47, 49
196	ZF gear selector switches	6, 19	101, 388	27, 63
909	ZF transmission control unit	19, 22	382, 469	63, 73
COM	EDC communication connector	24	545	79
RE1	Lamp check relay	11	219	9
RE2	Oil pressure low buzzer relay	11	198	9
TEST	EDC test connector	24	547	79

References to Service Bulletins

References to Service Bulletins

VOLVO

Volvo Bus Corporation
Göteborg, Sweden

TP 15634/1 English 2500.03.93